CLIENT:

Government Of Nepal
Ministry Of Education
Central Level Project Implementation Unit (CLPIU)
Gyaneshwor, Kathmandu, Nepal.

DONOR:

Japan International Cooperation Agency

PROJECT:

Emergency School Reconstruction Project

TYPE DESIGN:
2 Storey 6 Small Classroom
2-6C(S)

Government of Nepal
Ministry of Education
Central Level Project Implementation Unit
Gyaneshwor,Kathmandu

CONSULTANTS:

ORIENTAL CONSULTANTS GLOBAL
Global Consulting for sustainable Development

Joint Venture

MOHRI, ARCHITECT & ASSOCIATES, INC

EWES East West Engineering Service Pvt. Ltd.
P. Box-8621,Bansbari, Kathmandu, Nepal. web: ewesnepal.com
Tel: 9771-4373316, Fax: 4650203, email - hbgewe@gmail.com

September, 2016

2 STOREY 6 SMALL CLASSROOMS
2-6C(S)

TABLE OF CONTENT:

ARCHITECTURAL DRAWINGS		
S.N.	**CONTENTS**	**SHEET NO.**
1	GROUND FLOOR PLAN	A-01
2	FIRST FLOOR PLAN	A-02
3	ROOF PLAN	A-03
4	ELEVATIONS	A-04
5	ELEVATION & SECTION	A-05
6	WALL SECTION	A-06
7	STAIRCASE PLAN	A-07
8	STAIRCASE DETAILS	A-08
9	DOOR/ WINDOW DETAILS	A-09
10	FALSE CEILING LAYOUT PLAN	A-10
STRUCTURAL DRAWINGS		
S.N.	**CONTENTS**	**SHEET NO.**
11	GENERAL NOTES & TYPICAL DETAILS	S-00
12	TRENCH PLAN & TIE BEAM DETAIL	S-01
13	FOOTING PLAN &SECTION	S-02
14	FOOTING PLAN &SECTION	S-03
15	WALL FOUNDATION DETAILS	S-03(a)
16	COLUMN LAYOUT PLAN & DETAILS.	S-04
17	COLUMN DETAILS & SILL &LINTEL DETAILS.	S-05
18	PLINTH BEAM TIE PLAN	S-06
19	PLINTH BEAM TIE DETAILS.	S-07
20	PLINTH BEAM TIE DETAILS.	S-08
21	BEAM PLAN (FIRST FLOOR & TRUSS LEVEL)	S-09
22	BEAM DETAILS	S-10
23	BEAM DETAILS	S-11
24	BEAM DETAILS	S-12
25	BEAM DETAILS	S-13
26	BEAM DETAILS	S-14
27	SLAB PLAN & SECTION (FIRST FLOOR LEVEL)	S-15
28	STAIRCASE PLAN & SECTION	S-16
29	TRUSS PLAN & SECTION & DETAIL	S-17
30	TRUSS DETAILS	S-18
31	TRUSS DETAILS	S-19
ELECTRICAL DRAWINGS		
S.N.	**CONTENTS**	**SHEET NO.**
32	LIGHT, POWER AND DB LAYOUT (GROUND FLOOR)	E-01
33	LIGHT, POWER AND DB LAYOUT (FIRST FLOOR)	E-02

Government of Nepal
Ministry of Education
Central Level Project Implementation Unit
Gyaneshwor,Kathmandu

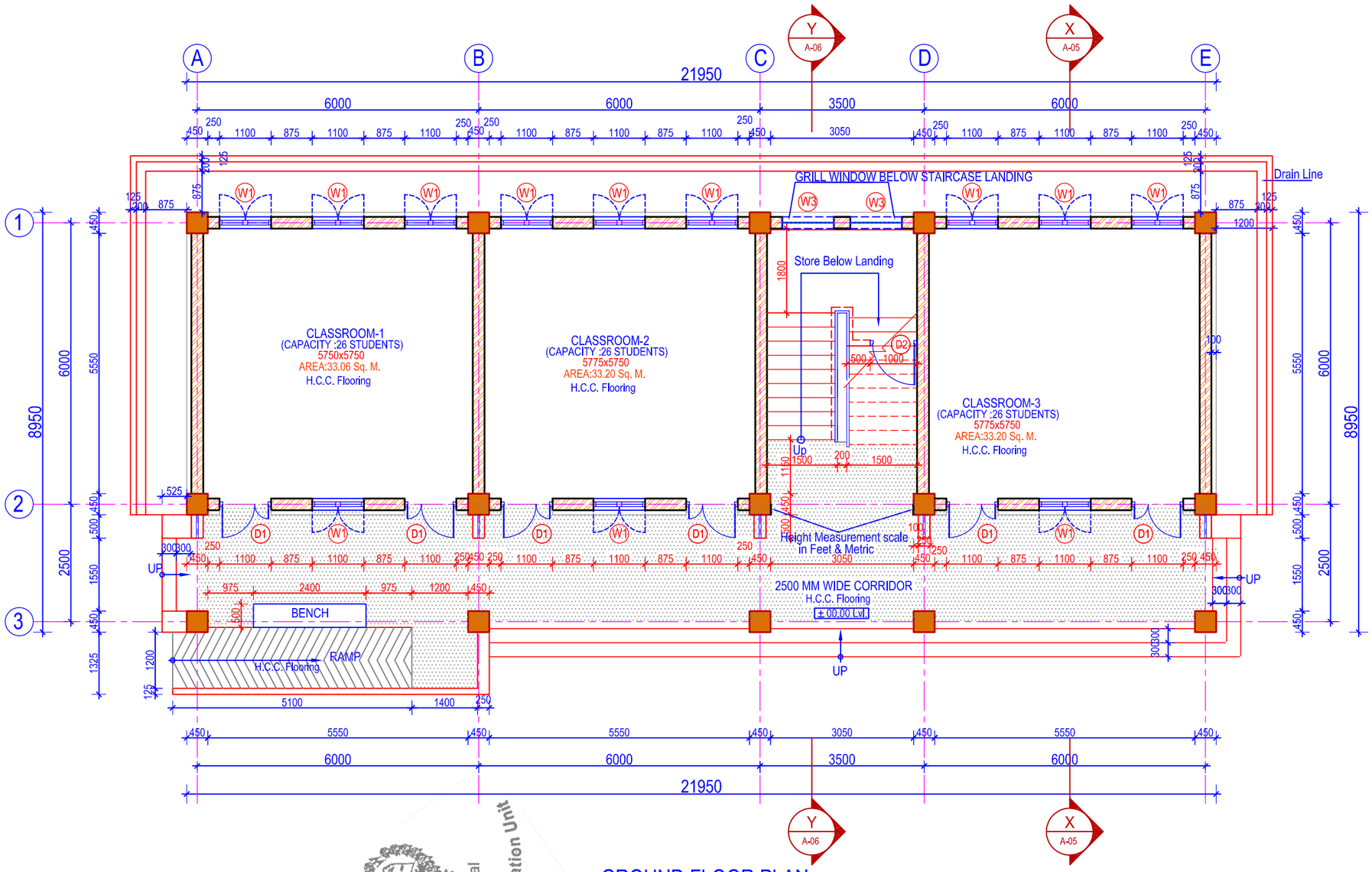

GROUND FLOOR PLAN

Area = 196.45 Sq. M.
(Scale= 1:100)

1:100 0 1M 2M 3M 4M 5M

Government of Nepal
Ministry of Education
Central Level Project Implementation Unit
Gyaneshwor,Kathmandu

NOTES:

1. Any discrepancy in the drawing to be immediately reported to the consultant or concerned engineer.
2. Drawing are not to be directly measured.
3. Read this drawing along with other related drawings and coordinate with Structural, Electrical, Plumbing and other services drawings.
4. Refer doors & windows schedule/elevations for size of doors & windows
5. Provide threshold at all exterior doors as per details, unless otherwise indicated.
6. The location of ramps to be adjusted as per site condition.

Government Of Nepal
Department Of Education
Sanothimi, Bhaktapur, Nepal

Donor :
Japan International Cooperation Agency

Project Title:
Emergency School Reconstruction Project

ORIENTAL CONSULTANTS GLOBAL
Global Consulting for sustainable Development
Joint Venture with
MOHRI, ARCHITECT & ASSOCIATES, INC

Sub-Consultant:
East West Engineering Service Pvt. Ltd.
P. Box-8621,Bansbari, Kathmandu, Nepal. web: ewesnepal.com
Tel: 9771-4373316, Fax: 4650203, email - hbgewe@gmail.com

Mr. Tomoki Miyano	Mr. H.B. Gurung
Mr. Hisafumi Michikawa	Mr. A.S. Tamang
Mr. Wong Kuok Hung	Ms. M. Rana

Type Design :
2 STOREY 6 SMALL CLASSROOMS

Sheet Title :
GROUND FLOOR PLAN

Sheet No.
2-6C(S)

Date : September, 2016
Print Sheet : A'3' Size

A-01

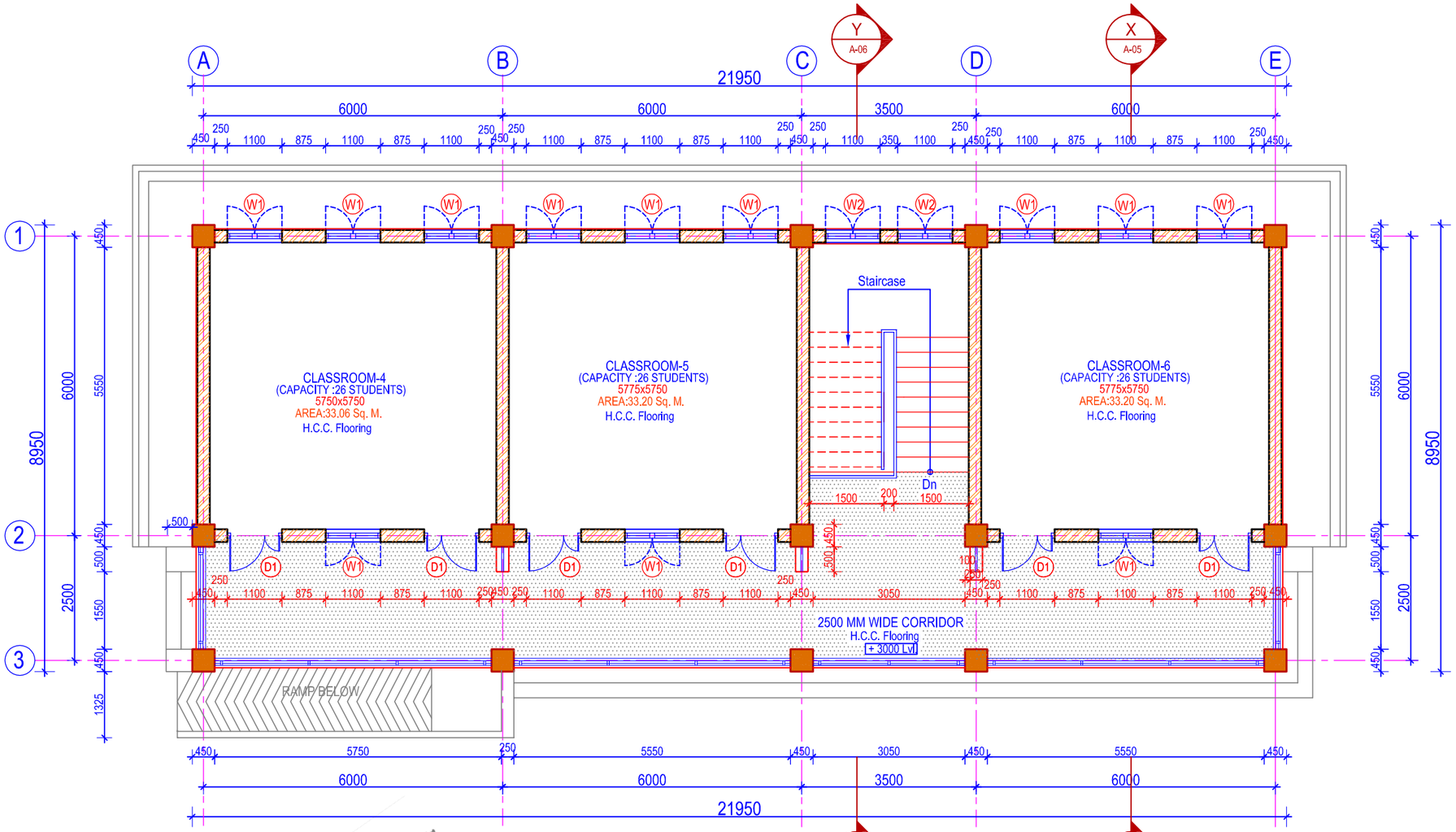

FIRST FLOOR PLAN

Area = 196.45 Sq. M.
(Scale= 1:100)

Government of Nepal
Ministry of Education
Central Level Project Implementation Unit
Gyaneshwor,Kathmandu

1:100 0 1M 2M 3M 4M 5M

NOTES:

1. Any discrepancy in the drawing to be immediately reported to the consultant or concerned engineer.
2. Drawing are not to be directly measured.
3. Read this drawing along with other related drawings and coordinate with Structural, Electrical, Plumbing and other services drawings.
4. Refer doors & windows schedule/elevations for size of doors & windows
5. Provide threshold at all exterior doors as per details, unless otherwise indicated.
6. The location of ramps to be adjusted as per site condition.

Government Of Nepal
Department Of Education
Sanothimi, Bhaktapur, Nepal

Donor : Japan International Cooperation Agency

Project Title:
Emergency School Reconstruction Project

ORIENTAL CONSULTANTS GLOBAL
Global Consulting for sustainable Development
Joint Venture with
MOHRI, ARCHITECT & ASSOCIATES, INC

Sub-Consultant:
EWES East West Engineering Service Pvt. Ltd.
P. Box-8621,Bansbari, Kathmandu, Nepal. web: ewesnepal.com
Tel: 9771-4373316, Fax: 4650203, email - hbgewe@gmail.com

Mr. Tomoki Miyano	Mr. H.B. Gurung
Mr. Hisafumi Michikawa	Mr. A.S. Tamang
Mr. Wong Kuok Hung	Ms. M. Rana

Type Design :
2 STOREY 6 SMALL CLASSROOMS

Sheet Title :
FIRST FLOOR PLAN

Sheet No.
2-6C(S)

Date : September, 2016
Print Sheet : A'3' Size

A-02

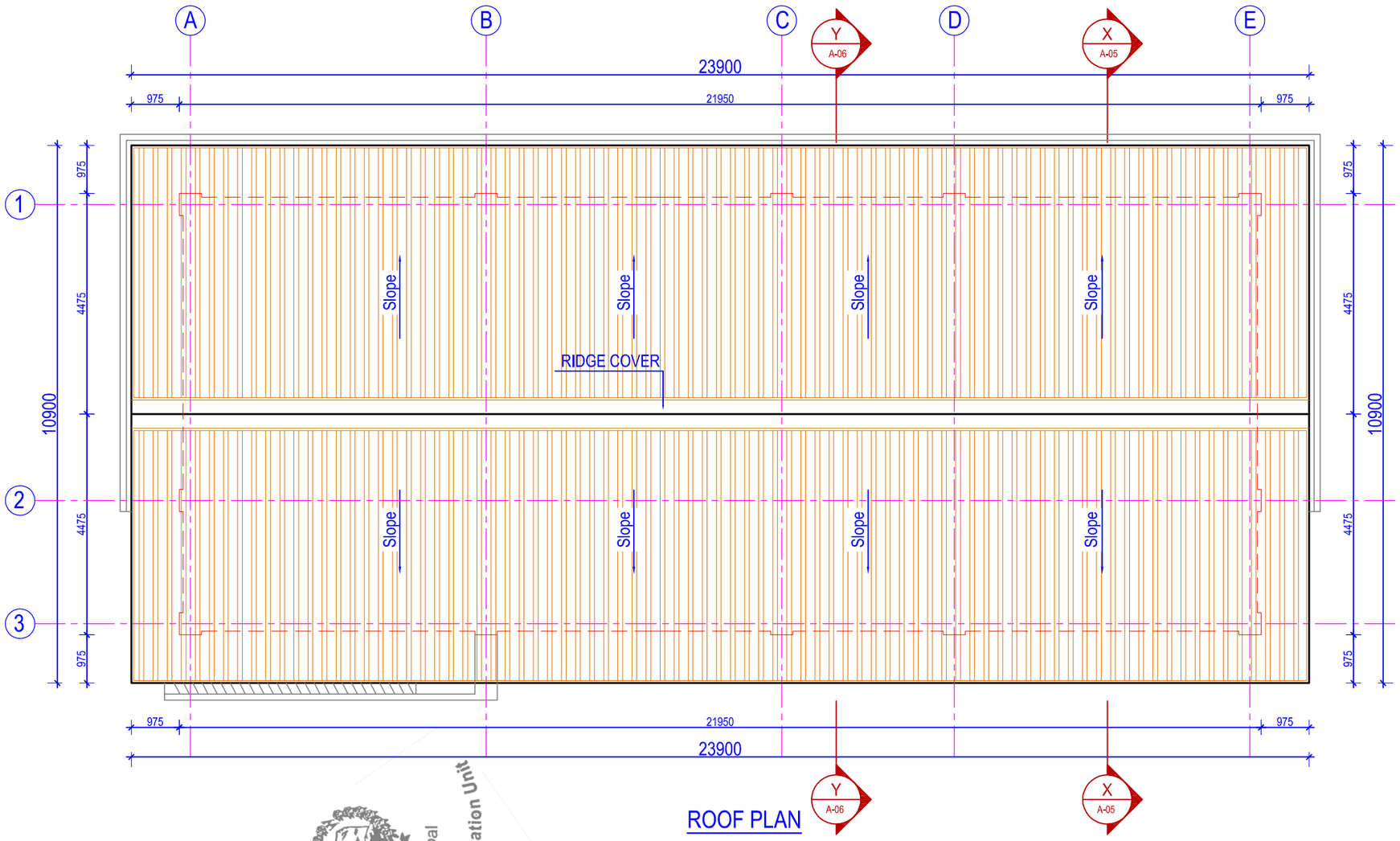

ROOF PLAN

(Scale= 1:100)

Government of Nepal
Ministry of Education
Central Level Project Implementation Unit
Gyaneshwor, Kathmandu

1:100 0 1M 2M 3M 4M 5M

NOTES:

1. Any discrepancy in the drawing to be immediately reported to the consultant or concerned engineer.
2. Drawing are not to be directly measured.
3. Read this drawing along with other related drawings and coordinate with Structural, Electrical, Plumbing and other services drawings.
4. Refer doors & windows schedule/elevations for size of doors & windows
5. Provide threshold at all exterior doors as per details, unless otherwise indicated.
6. The location of ramps to be adjusted as per site condition.

Government Of Nepal
Department Of Education
Sanothimi, Bhaktapur, Nepal

Donor :
Japan International Cooperation Agency

Project Title:
Emergency School Reconstruction Project

ORIENTAL CONSULTANTS GLOBAL
Global Consulting for sustainable Development
Joint Venture with
MOHRI, ARCHITECT & ASSOCIATES, INC

Sub-Consultant:
East West Engineering Service Pvt. Ltd.
P. Box-8621,Bansbari, Kathmandu, Nepal. web: ewesnepal.com
Tel: 9771-4373316, Fax: 4650203, email - hbgewe@gmail.com

Mr. Tomoki Miyano	Mr. H.B. Gurung
Mr. Hisafumi Michikawa	Mr. A.S. Tamang
Mr. Wong Kuok Hung	Ms. M. Rana

Type Design :
2 STOREY 6 SMALL CLASSROOMS

Sheet Title :
ROOF PLAN

Sheet No.
2-6C(S)

Date : September, 2016
Print Sheet : A'3' Size

A-03

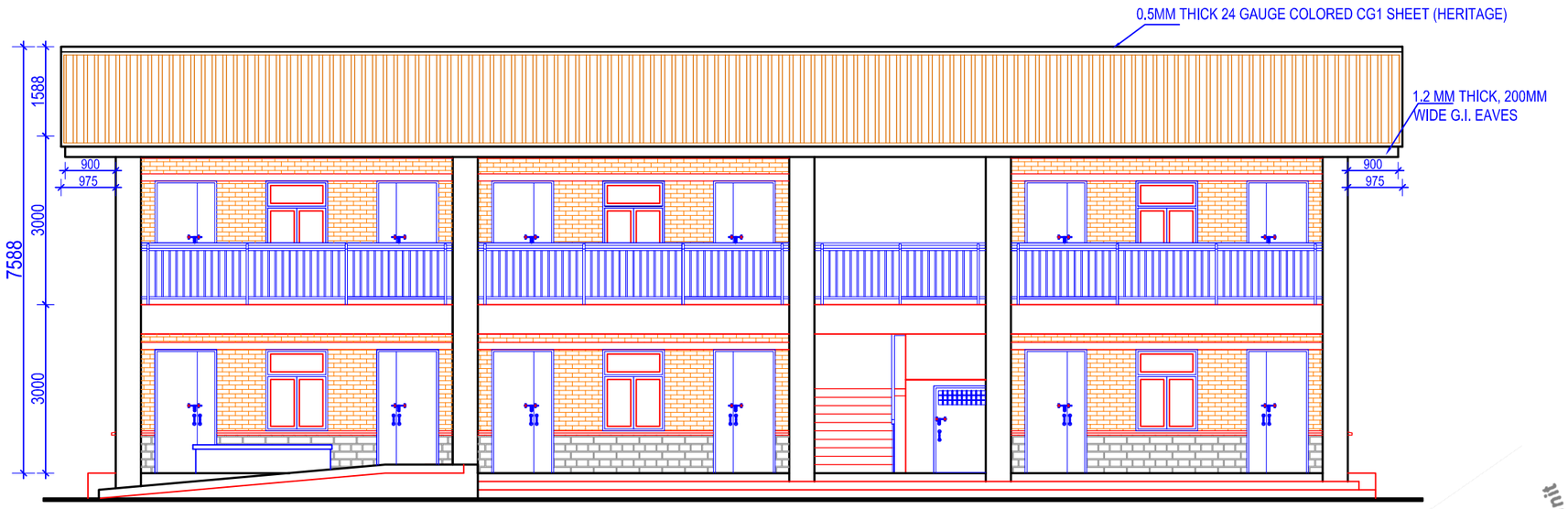

FRONT ELEVATION

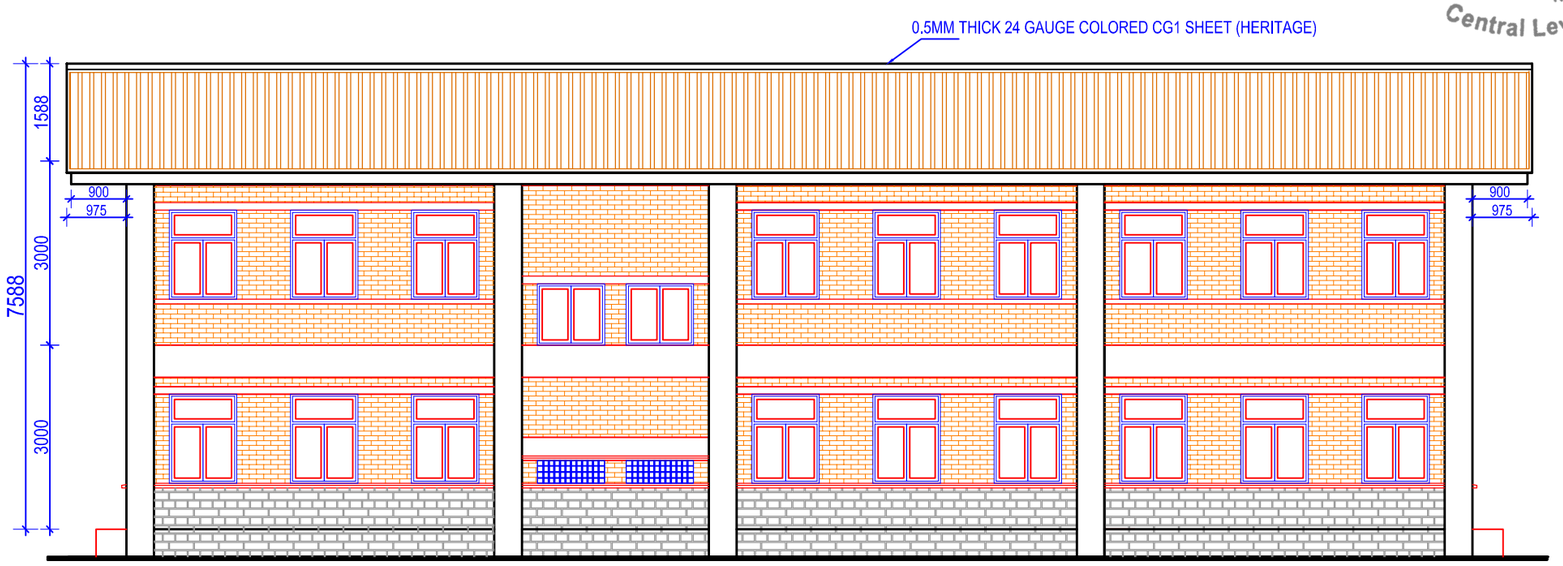

BACK ELEVATION

1:100 0 1M 2M 3M 4M 5M

Government of Nepal
Ministry of Education
Central Level Project Implementation Unit
Gyaneshwor,Kathmandu

NOTES:

1. Any discrepancy in the drawing to be immediately reported to the consultant or concerned engineer.
2. Drawing are not to be directly measured.
3. Read this drawing along with other related drawings and coordinate with Structural, Electrical, Plumbing and other services drawings.
4. Refer doors & windows schedule/elevations for size of doors & windows
5. Provide threshold at all exterior doors as per details, unless otherwise indicated.
6. The location of ramps to be adjusted as per site condition.

Government Of Nepal
Department Of Education
Sanothimi, Bhaktapur, Nepal

Donor :
Japan International Cooperation Agency

Project Title:
Emergency School Reconstruction Project

ORIENTAL CONSULTANTS GLOBAL
Global Consulting for sustainable Development
Joint Venture with
MOHRI, ARCHITECT & ASSOCIATES, INC

Sub-Consultant:
EWES East West Engineering Service Pvt. Ltd.
P. Box-8621,Bansbari, Kathmandu, Nepal. web: ewesnepal.com
Tel: 9771-4373316, Fax: 4650203, email - hbgewe@gmail.com

Mr. Tomoki Miyano	Mr. H.B. Gurung
Mr. Hisafumi Michikawa	Mr. A.S. Tamang
Mr. Wong Kuok Hung	Ms. M. Rana

Type Design :
2 STOREY 6 SMALL CLASSROOMS

Sheet Title :
ELEVATIONS

Sheet No.
2-6C(S)

Date : September, 2016
Print Sheet : A'3' Size

A-04

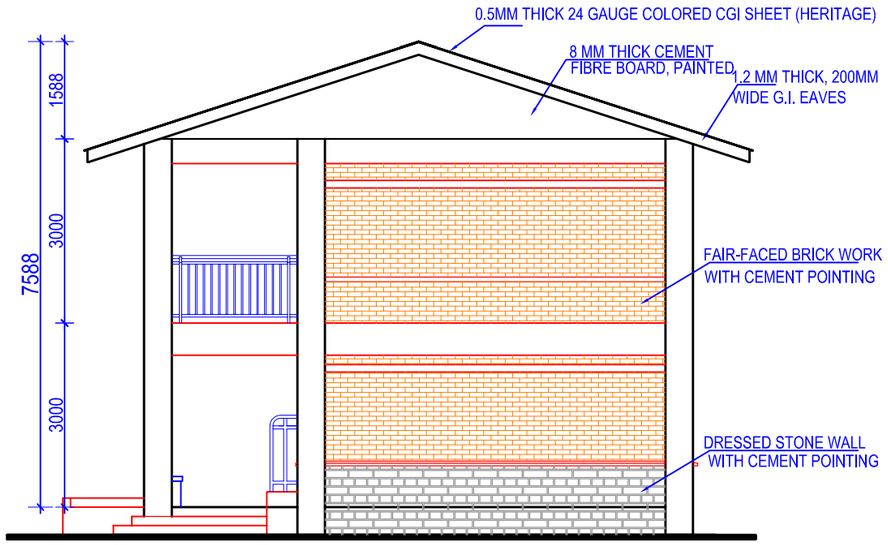

SIDE ELEVATION

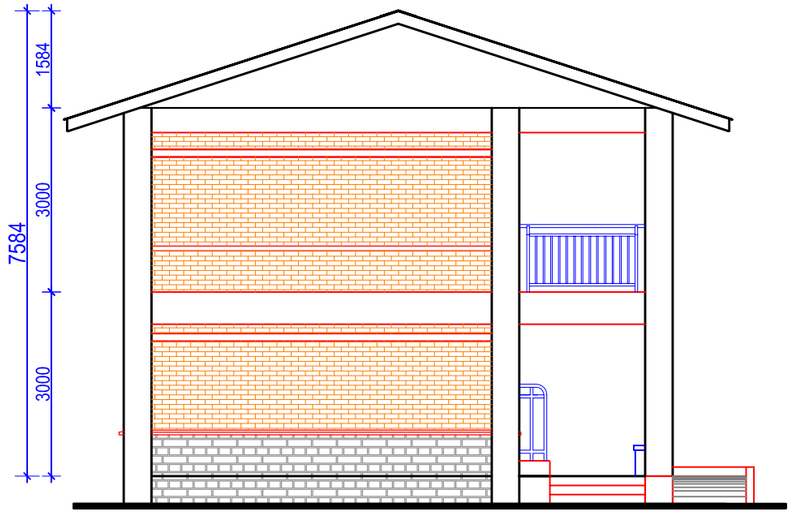

SIDE ELEVATION

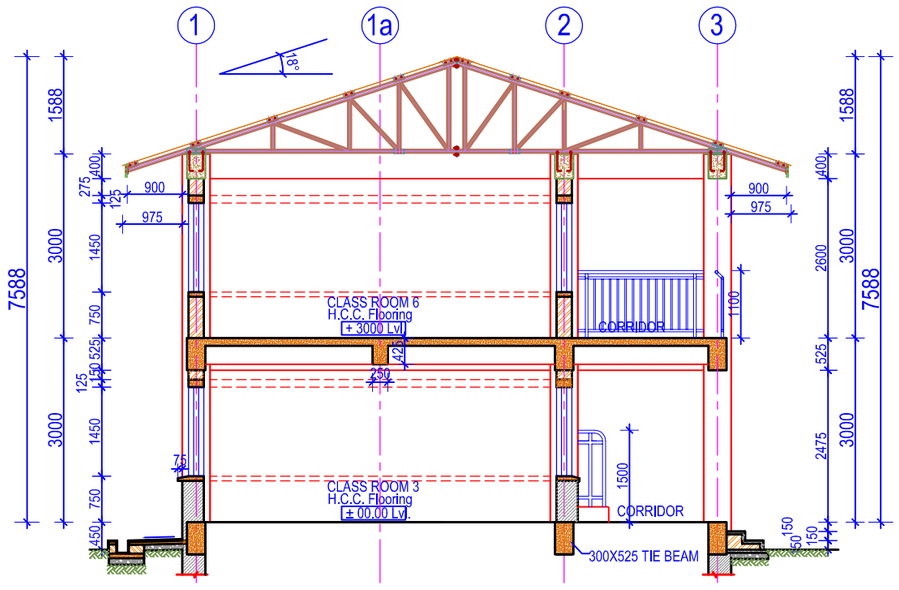

SECTION AT X-X

Government of Nepal
Ministry of Education
Central Level Project Implementation Unit
Gyaneshwor,Kathmandu

1:100 0 1M 2M 3M 4M 5M

NOTES:

1. Any discrepancy in the drawing to be immediately reported to the consultant or concerned engineer.
2. Drawing are not to be directly measured.
3. Read this drawing along with other related drawings and coordinate with Structural, Electrical, Plumbing and other services drawings.
4. Refer doors & windows schedule/elevations for size of doors & windows
5. Provide threshold at all exterior doors as per details, unless otherwise indicated.
6. The location of ramps to be adjusted as per site condition.

Government Of Nepal
Department Of Education
Sanothimi, Bhaktapur, Nepal

Donor :
Japan International Cooperation Agency

Project Title:
Emergency School Reconstruction Project

ORIENTAL CONSULTANTS GLOBAL
Global Consulting for sustainable Development
Joint Venture with
MOHRI, ARCHITECT & ASSOCIATES, INC

Sub-Consultant:
EWES East West Engineering Service Pvt. Ltd.
P. Box-8621,Bansbari, Kathmandu, Nepal. web: ewesnepal.com
Tel: 9771-4373316, Fax: 4650203, email - hbgewe@gmail.com

Mr. Tomoki Miyano	Mr. H.B. Gurung
Mr. Hisafumi Michikawa	Mr. A.S. Tamang
Mr. Wong Kuok Hung	Ms. M. Rana

Type Design :
2 STOREY 6 SMALL CLASSROOMS

Sheet Title :
ELEVATION & SECTIONS

Sheet No.
2-6C(S)

Date : September, 2016
Print Sheet : A'3' Size

A-05

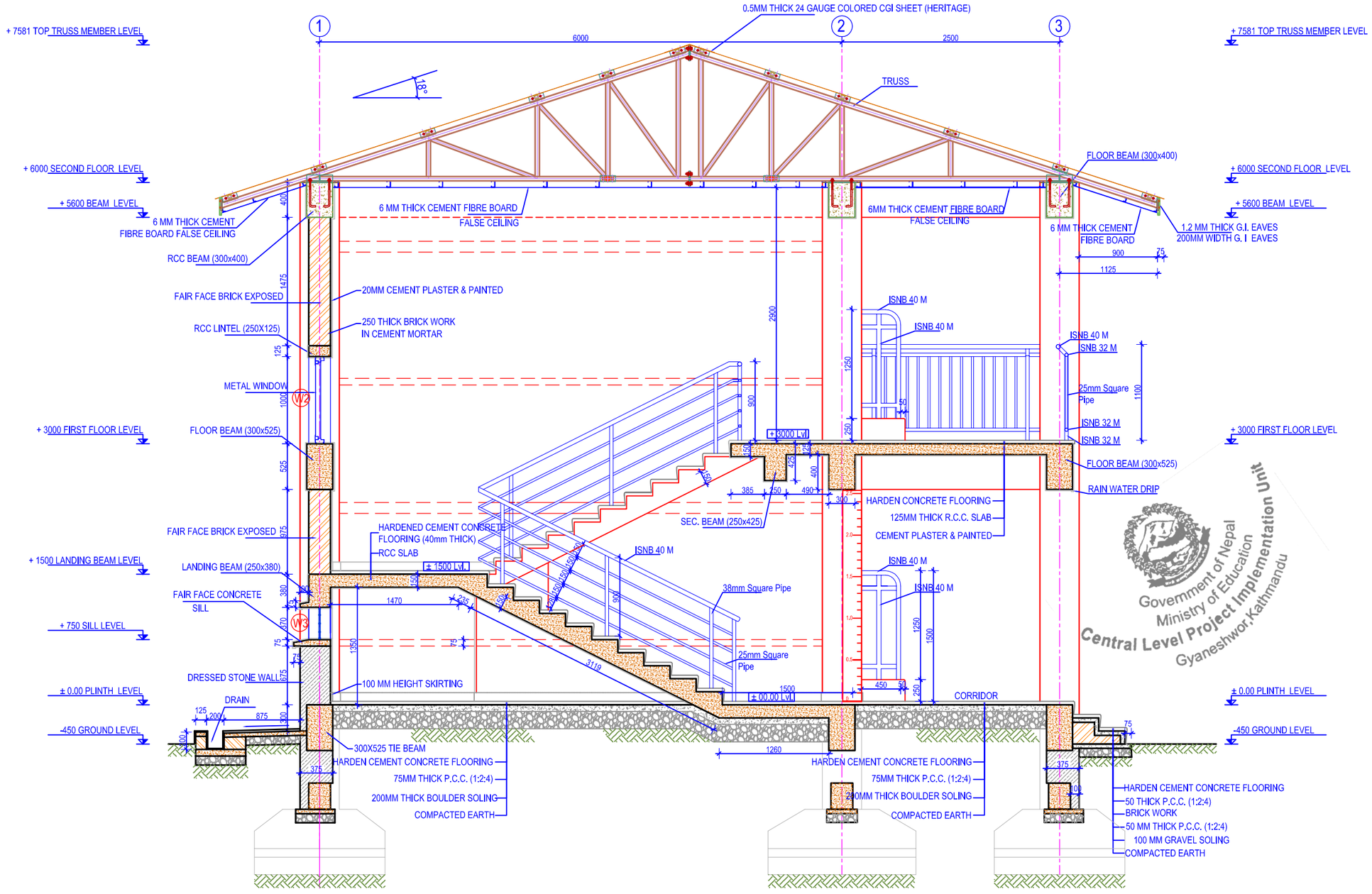

WALL SECTION AT Y-Y

(Scale= 1:50)

0 0.5M 1M 1.5M 2M 1.5M
1:50

NOTES:

1. Any discrepancy in the drawing to be immediately reported to the consultant or concerned engineer.
2. Drawing are not to be directly measured.
3. Read this drawing along with other related drawings and coordinate with Structural, Electrical, Plumbing and other services drawings.
4. Refer doors & windows schedule/elevations for size of doors & windows
5. Provide threshold at all exterior doors as per details, unless otherwise indicated.
6. The location of ramps to be adjusted as per site condition.

Government Of Nepal
Department Of Education
Sanothimi, Bhaktapur, Nepal

Donor : Japan International Cooperation Agency

Project Title:
Emergency School Reconstruction Project

ORIENTAL CONSULTANTS GLOBAL
Global Consulting for sustainable Development
Joint Venture with
MOHRI, ARCHITECT & ASSOCIATES, INC

Sub-Consultant:
EWES East West Engineering Service Pvt. Ltd.
P. Box-8621,Bansbari, Kathmandu, Nepal. web: ewesnepal.com
Tel: 9771-4373316, Fax: 4650203, email - hbgewe@gmail.com

Mr. Tomoki Miyano	Mr. H.B. Gurung
Mr. Hisafumi Michikawa	Mr. A.S. Tamang
Mr. Wong Kuok Hung	Ms. M. Rana

Type Design :
2 STOREY 6 SMALL CLASSROOMS

Sheet Title :
WALL SECTIONS

Sheet No.
2-6C(S)

Date : September, 2016
Print Sheet : A'3' Size

A-06

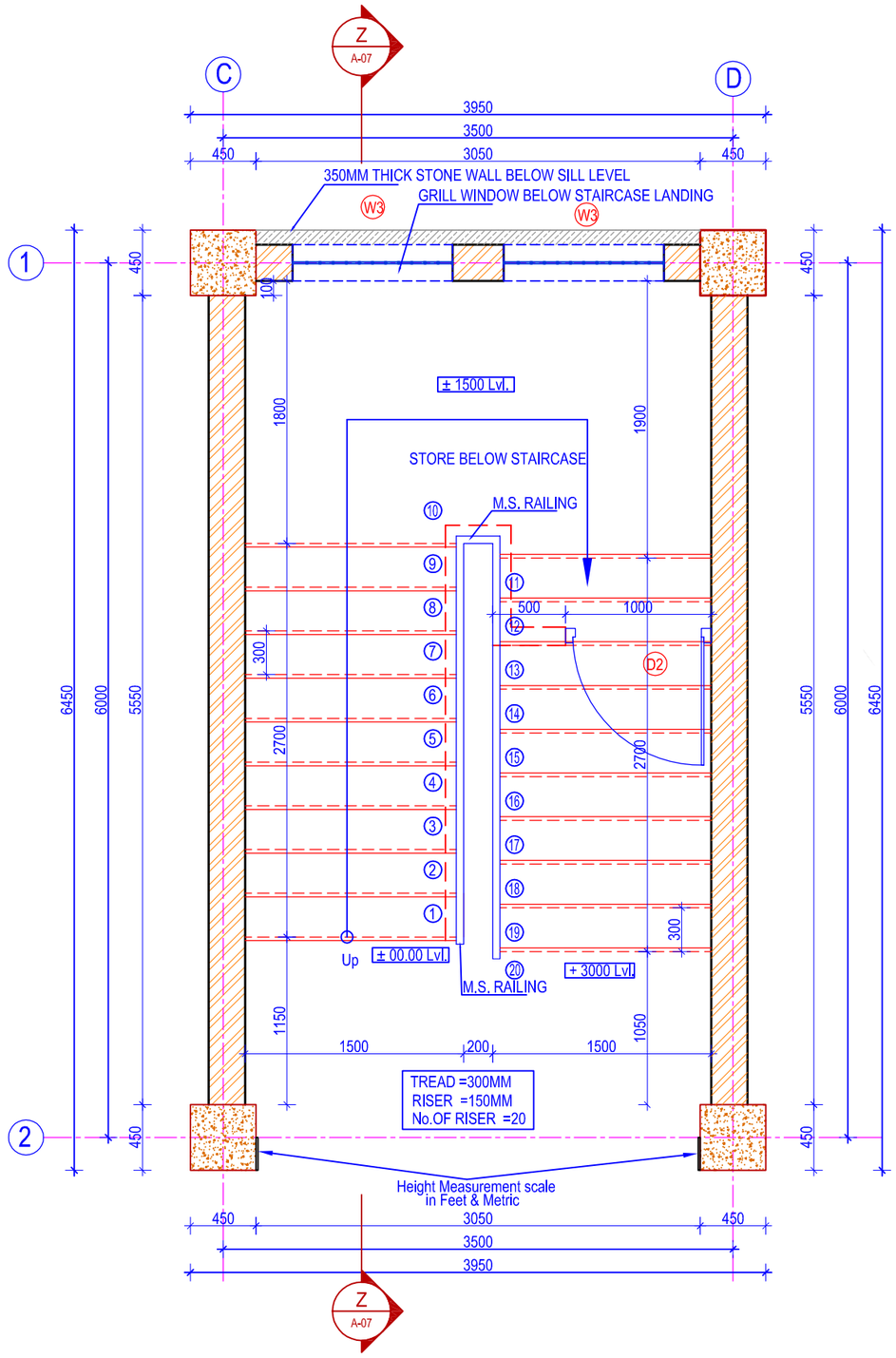

STAIRCASE PLAN

(Scale= 1:40)

NOTES:

1. Any discrepancy in the drawing to be immediately reported to the consultant or concerned engineer.
2. Drawing are not to be directly measured.
3. Read this drawing along with other related drawings and coordinate with Structural, Electrical, Plumbing and other services drawings.
4. Refer doors & windows schedule/elevations for size of doors & windows
5. Provide threshold at all exterior doors as per details, unless otherwise indicated.
6. The location of ramps to be adjusted as per site condition.

Government of Nepal
Ministry of Education
Central Level Project Implementation Unit
Gyaneshwor,Kathmandu

Government Of Nepal
Department Of Education
Sanothimi, Bhaktapur, Nepal

Donor :
Japan International Cooperation Agency

Project Title:
Emergency School Reconstruction Project

ORIENTAL CONSULTANTS GLOBAL
Global Consulting for sustainable Development
Joint Venture with
MOHRI, ARCHITECT & ASSOCIATES, INC

Sub-Consultant:
East West Engineering Service Pvt. Ltd.
P. Box-8621,Bansbari, Kathmandu, Nepal. web: ewesnepal.com
Tel: 9771-4373316, Fax: 4650203, email - hbgewe@gmail.com

Mr. Tomoki Miyano	Mr. H.B. Gurung
Mr. Hisafumi Michikawa	Mr. A.S. Tamang
Mr. Wong Kuok Hung	Ms. M. Rana

Type Design :
2 STOREY 6 SMALL CLASSROOMS

Sheet Title :
STAIRCASE PLAN

Sheet No.
2-6C(S)

Date : September, 2016

Print Sheet : A'3' Size

A-07

1:40 0 0.4M 0.8M 1.2M 1.6M 2M

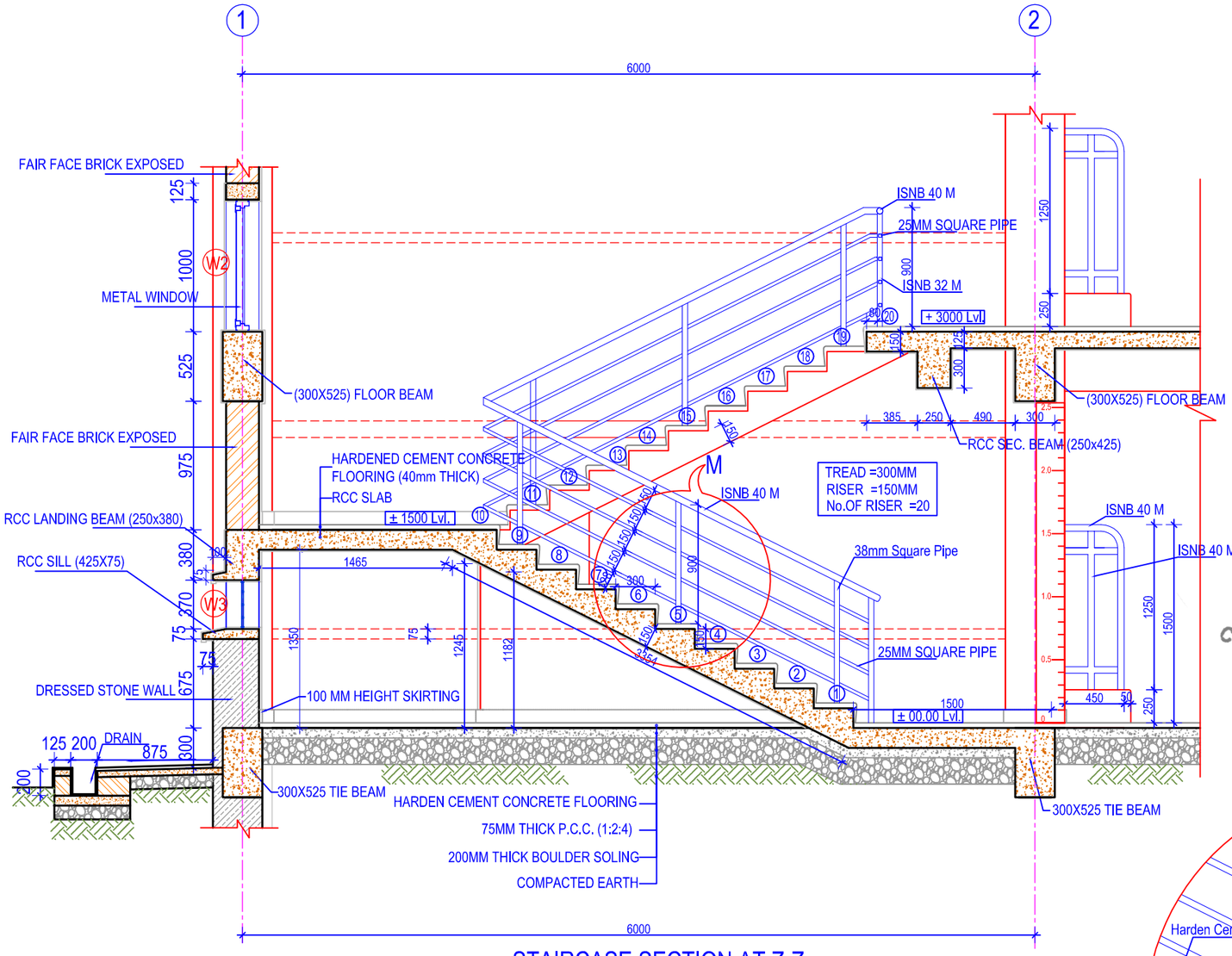

STAIRCASE SECTION AT Z-Z

(Scale= 1:40)

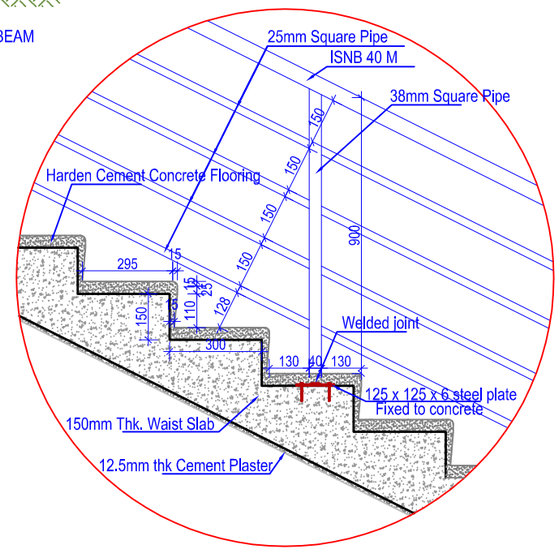

DETAIL AT M

(Scale= 1:20)

1:20 0 0.2M 0.4M 0.6M 0.8M 1M

1:40 0 0.4M 0.8M 1.2M 1.6M 2M

Government of Nepal
Ministry of Education
Central Level Project Implementation Unit
Gyaneshwor,Kathmandu

NOTES:

1. Any discrepancy in the drawing to be immediately reported to the consultant or concerned engineer.
2. Drawing are not to be directly measured.
3. Read this drawing along with other related drawings and coordinate with Structural, Electrical, Plumbing and other services drawings.
4. Refer doors & windows schedule/elevations for size of doors & windows
5. Provide threshold at all exterior doors as per details, unless otherwise indicated.
6. The location of ramps to be adjusted as per site condition.

Government Of Nepal
Department Of Education
Sanothimi, Bhaktapur, Nepal

Donor : Japan International Cooperation Agency

Project Title:
Emergency School Reconstruction Project

ORIENTAL CONSULTANTS GLOBAL
Global Consulting for sustainable Development
Joint Venture with
MOHRI, ARCHITECT & ASSOCIATES, INC

Sub-Consultant:
EWES East West Engineering Service Pvt. Ltd.
P. Box-8621,Bansbari, Kathmandu, Nepal. web: ewesnepal.com
Tel: 9771-4373316, Fax: 4650203, email - hbgewe@gmail.com

Mr. Tomoki Miyano	Mr. H.B. Gurung
Mr. Hisafumi Michikawa	Mr. A.S. Tamang
Mr. Wong Kuok Hung	Ms. M. Rana

Type Design :
2 STOREY 6 SMALL CLASSROOMS

Sheet Title :
STAIRCASE DETAILS

Sheet No. 2-6C(S)

Date : September, 2016

Print Sheet : A'3' Size

A-08

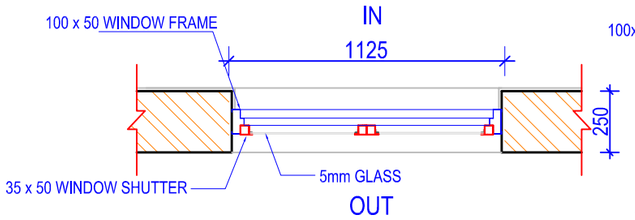

TYPICAL WINDOW(W1) SECTIONAL PLAN

(Scale= 1:25)

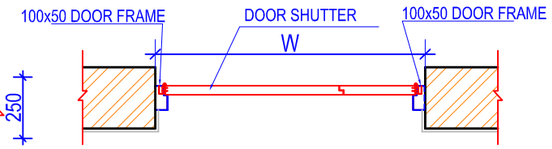

TYPICAL METAL DOOR SECTIONAL PLAN

(Scale= 1:25)

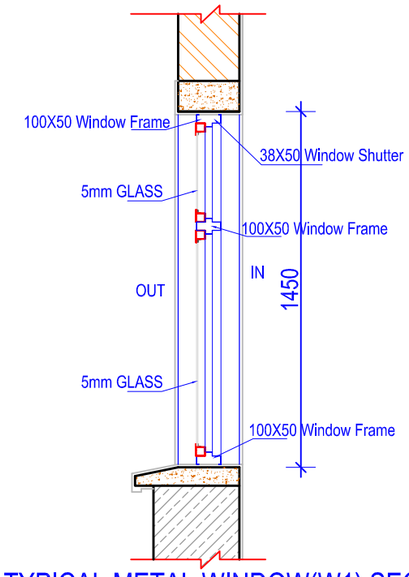

TYPICAL METAL WINDOW(W1) SECTION

(Scale= 1:25)

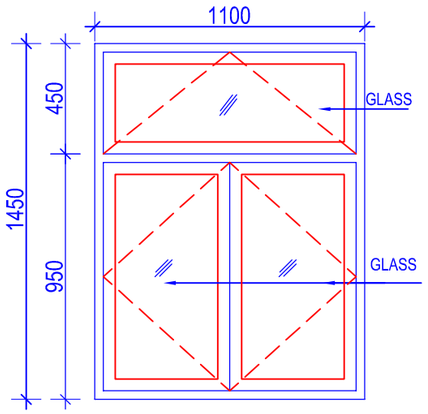

WINDOW-W1 (24 Nos.)

Area: 1.59 Sq.M.

(Scale= 1:25)

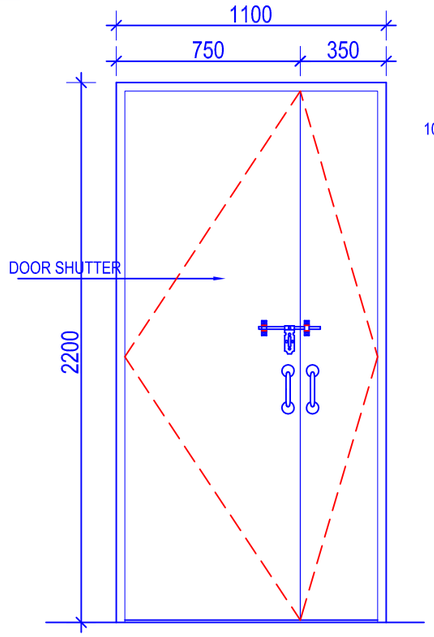

DOOR-D1 (12 Nos.)

Area: 2.41 Sq.M.

(Scale= 1:25)

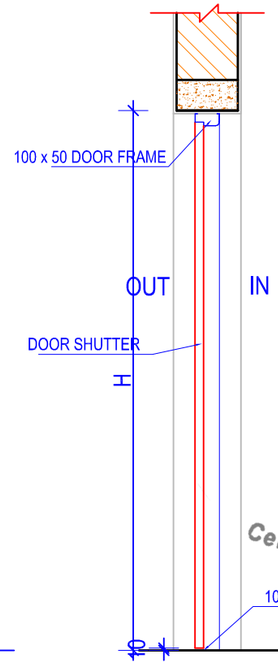

TYPICAL METAL DOOR SECTIONAL ELEVATION

(Scale= 1:25)

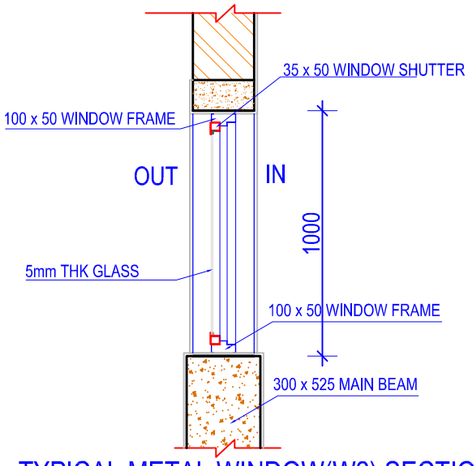

TYPICAL METAL WINDOW(W2) SECTION

(Scale= 1:25)

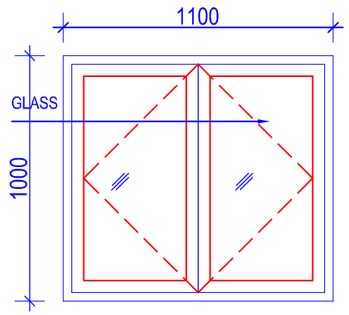

WINDOW-W2 (2 Nos.)

Area: 1.10 Sq.M.

(Scale= 1:25)

DOORS & WINDOWS SCHEDULE:

S.N.	SYMBOL	SIZES	G.F.	F.F.	TOTAL	REMARKS
1.	W1	1100 x 1450	12	12	24	MS Frame & Shutter With Grill For Ground Floor Both Sides & First Floor Corridor Side
2.	W2	1100 x 1000	0	2	2	MS Frame & Shutter With Grill
3.	W3	1100 x 370	2	0	0	MS Square Rod(Grill)
4.	D1	1100 x 2200	6	6	12	MS Frame & Shutter
5.	D2	1000 x 1550	1	0	1	MS Frame & Shutter
TOTAL			19	22	41	

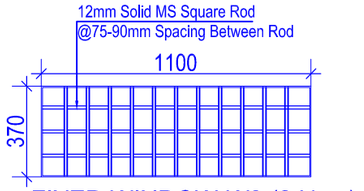

FIXED WINDOW-W3 (2 Nos.)

(Scale= 1:25)

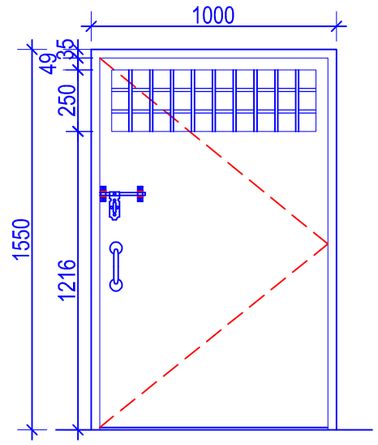

DOOR-D2 (1 No.)

Area: 2.41 Sq.M.

(Scale= 1:25)

1:25 0 0.25M 0.5M 0.75M 1M 1.25M

NOTES:

1. Any discrepancy in the drawing to be immediately reported to the consultant or concerned engineer.
2. Drawing are not to be directly measured.
3. Read this drawing along with other related drawings and coordinate with Structural, Electrical, Plumbing and other services drawings.
4. Refer doors & windows schedule/elevations for size of doors & windows
5. Provide threshold at all exterior doors as per details, unless otherwise indicated.
6. The location of ramps to be adjusted as per site condition.

Government of Nepal
Ministry of Education
Central Level Project Implementation Unit
Gyaneshwor,Kathmandu

Government Of Nepal
Department Of Education
Sanothimi, Bhaktapur, Nepal

Donor : Japan International Cooperation Agency

Project Title:
Emergency School Reconstruction Project

ORIENTAL CONSULTANTS GLOBAL
Global Consulting for sustainable Development
Joint Venture with
MOHRI, ARCHITECT & ASSOCIATES, INC

Sub-Consultant:
EWES East West Engineering Service Pvt. Ltd.
P. Box-8621,Bansbari, Kathmandu, Nepal. web: ewesnepal.com
Tel: 9771-4373316, Fax: 4650203, email - hbgewe@gmail.com

Mr. Tomoki Miyano	Mr. H.B. Gurung
Mr. Hisafumi Michikawa	Mr. A.S. Tamang
Mr. Wong Kuok Hung	Ms. M. Rana

Type Design :
2 STOREY 6 SMALL CLASSROOMS

Sheet Title :
DOOR & WINDOW DETAILS

Sheet No.
2-6C(S)

Date : September, 2016

Print Sheet : A'3' Size

A-09

Government of Nepal
Ministry of Education
Central Level Project Implementation Unit
Gyaneshwor,Kathmandu

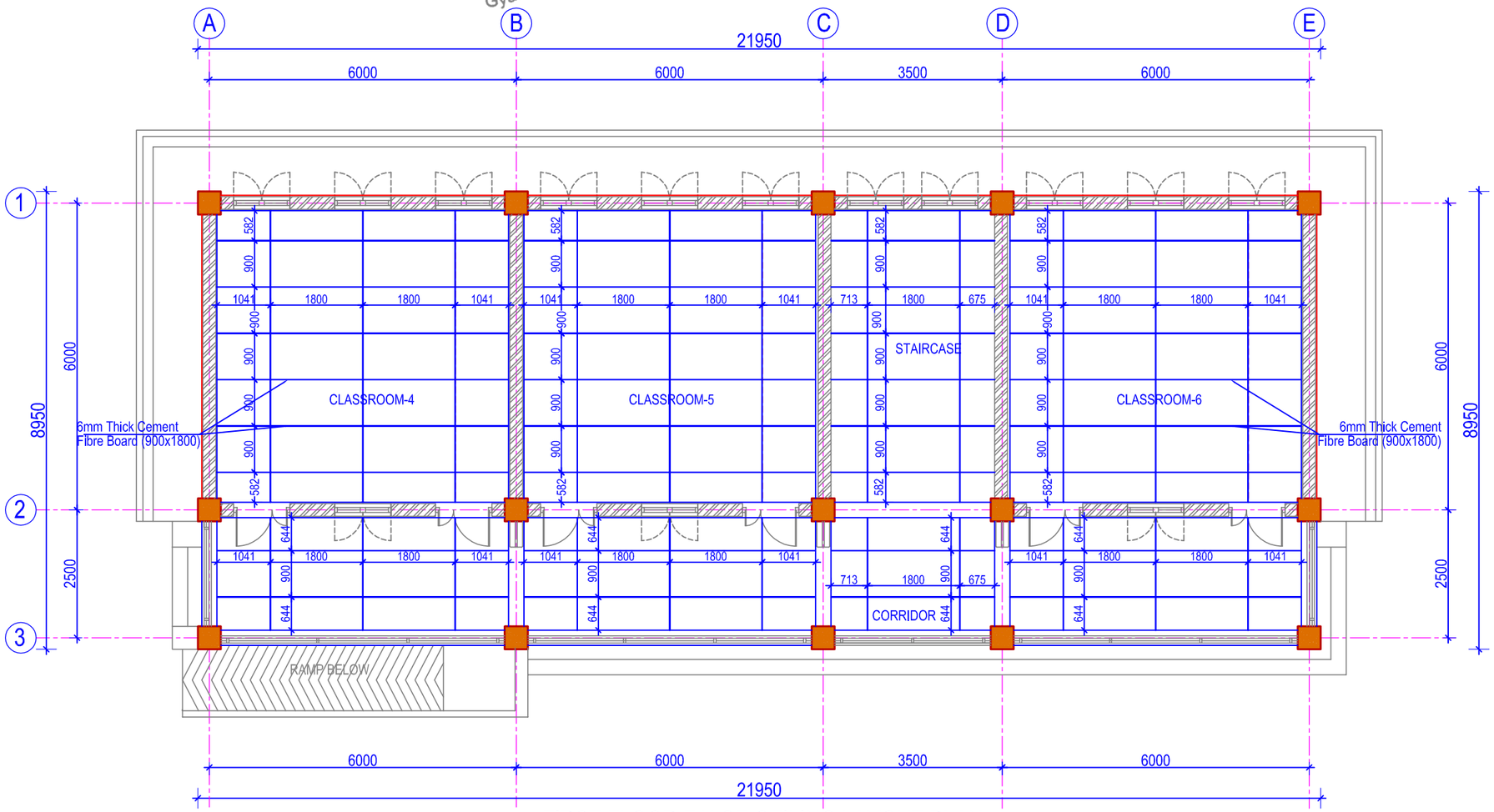

FIRST FLOOR FALSE CEILING LAYOUT PLAN

NOTES:

1. Any discrepancy in the drawing to be immediately reported to the consultant or concerned engineer.
2. Drawing are not to be directly measured.
3. Read this drawing along with other related drawings and coordinate with Structural, Electrical, Plumbing and other services drawings.
4. Refer doors & windows schedule/elevations for size of doors & windows
5. Provide threshold at all exterior doors as per details, unless otherwise indicated.
6. The location of ramps to be adjusted as per site condition.

Government Of Nepal
Department Of Education
Sanothimi, Bhaktapur, Nepal

Donor :
Japan International Cooperation Agency

Project Title:
Emergency School Reconstruction Project

ORIENTAL CONSULTANTS GLOBAL
Global Consulting for sustainable Development
Joint Venture with
MOHRI, ARCHITECT & ASSOCIATES, INC

Sub-Consultant:
East West Engineering Service Pvt. Ltd.
P. Box-8621,Bansbari, Kathmandu, Nepal. web: ewesnepal.com
Tel: 9771-4373316, Fax: 4650203, email - hbgewe@gmail.com

Mr. Tomoki Miyano	Mr. H.B. Gurung
Mr. Hisafumi Michikawa	Mr. A.S. Tamang
Mr. Wong Kuok Hung	Ms. M. Rana

Type Design :
2 STOREY 6 SMALL CLASSROOMS

Sheet Title :
FALSE CEILING
LAYOUT PLAN

Sheet No.
2-6C(S)

Date : September, 2016
Print Sheet : A'3' Size

A-10

GENERAL NOTE:

1. USE M20 (1:1.5:3) GRADE CONCRETE FOR SLAB, BEAM, COLUMN, FOUNDATION, SILL & LINTEL BANDS (ALL RCC WORKS)
2. USE Fe500 GRADE STEEL (fy=500N/mm^2) for stirrups Fe415 N/mm2
3. CLEAR COVER TO BARS
   a. FOR CONCRETE MEMBERS IN CONTACT WITH SOIL = MIN 50mm
   b. FOR LONGITUDINAL (VERTICAL) BARS IN COLUMN = 40mm
   c. FOR MAIN BARS IN BEAMS = 25mm
   d. FOR OUTER BARS IN SLAB = 20mm
4. BARS IN COLUMNS SHALL BE SPLICED ONLY AT MID HEIGHT OF COLUMN AS PER DUCTILE DETAILING IS 13920- 2014
5. BARS SPLICING IN BEAM SHALL BE AVOIDED IN THE SPAN WHERE INTERMEDIATE BEAM IS CONNECTED AND SHALL BE ONLY AS SHOWN ON DWG.
6. DEVELOPMENT / LAP LENGTH (Ld.) FOR BARS.

BAR DIA-(mm)	8	10	12	16	20	25	32
FOR M20 Ld	480	600	720	960	1200	1500	1920

7. TEMP./DISTRIBUTION REINFORCEMENT FOR SLAB - TMT 8Ø @ 150 C/C
8. CLEAR VERTICAL DISTANCE BETWEEN TWO ROWS (LAYERS) OF BARS=25mm.
9. PROVIDE SHEAR REINFORCEMENT AT 100 C/C AT LAP LOCATIONS.
10. H = CLEAR SPAN OF FLOOR.
11. h = H/6 OR 450mm OR LARGER LATERAL DIMENSION OF THE MEMBER ,WHICHEVER IS GREATER.
12. Z = DEPTH OF BEAM.
13. STRUCTURAL STEEL SHALL HAVE STRENGTH Fy 345MPa
14. FOUNDATION TYPE SHOULD BE DECIDED BY SITE CONDITION AFTER EXCAVATION OF FOUNDATION.
15. IF BEARING CAPACITY IS LESS THAN 50 kN/m2, FOUNDATION SHOULD BE RE-DESIGNED.
16. PROVIDE 2-16dia TORSION BARS IN 525mm DEEP BEAM

Government of Nepal
Ministry of Education
Central Level Project Implementation Unit
Gyaneshwor,Kathmandu

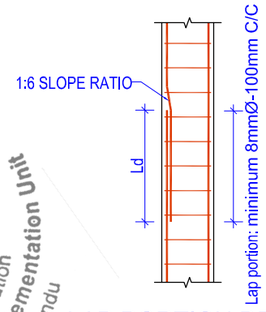

LAP PORTION DETAIL

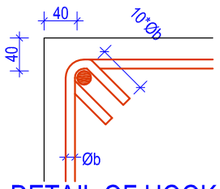

DETAIL OF HOOK
(Not to Scale)

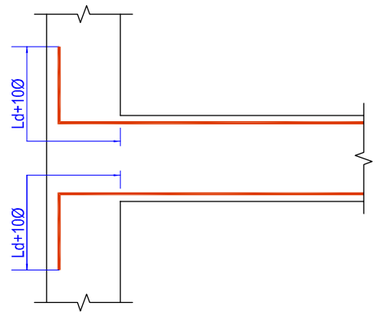

CONNECTION DETAIL BETWEEN MAIN & SECONDARY BEAM (PLAN)

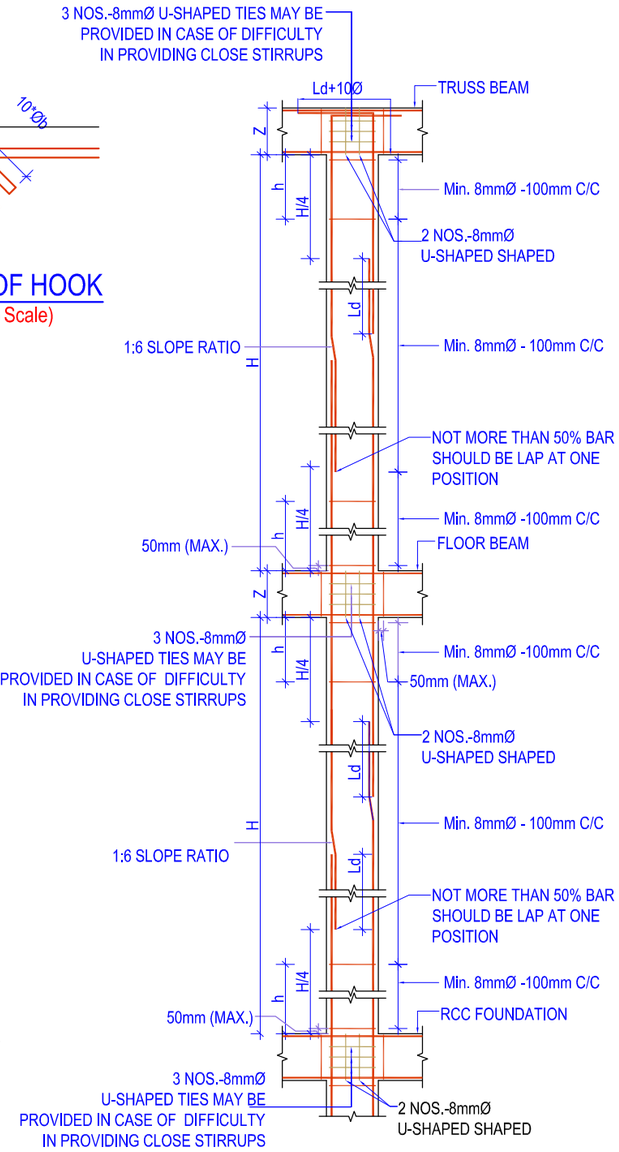

TYP. COLUMN SHEAR REINFORCEMENT DETAIL

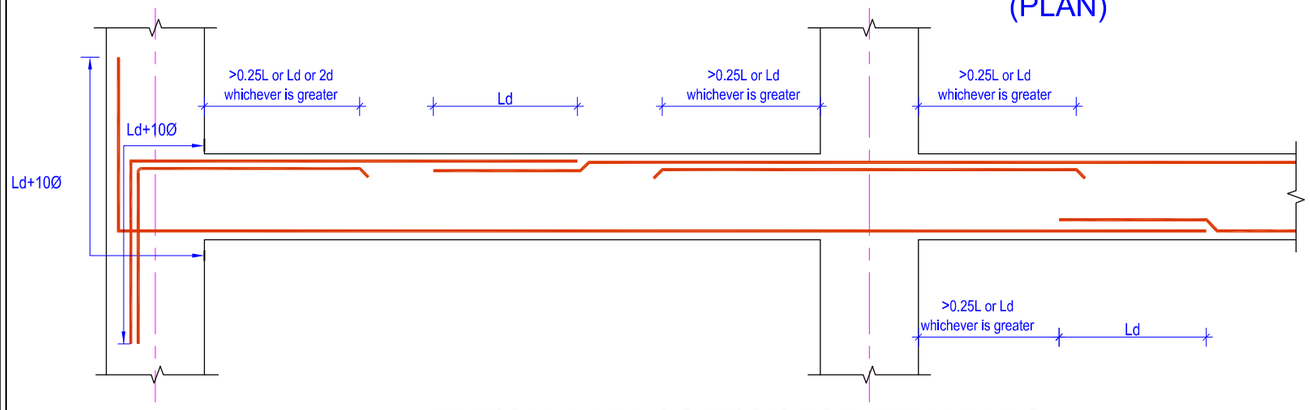

TYPICAL LAP LOCATION FOR BEAM BARS

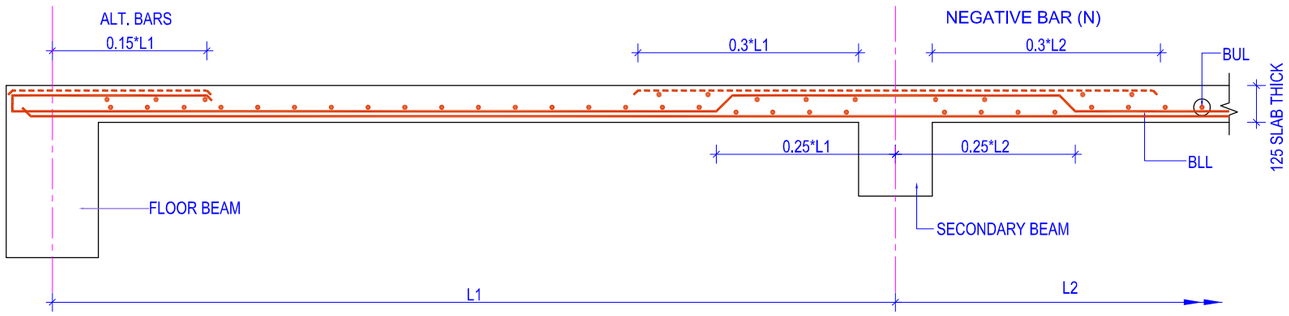

TYPICAL BENT-UP DETAIL FOR SLAB BARS

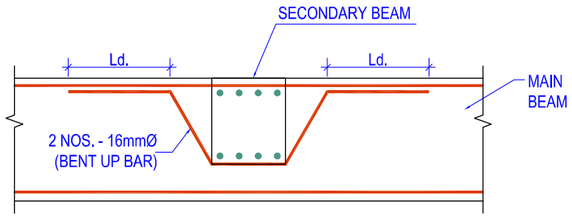

CONNECTION DETAIL BETWEEN MAIN & SECONDARY BEAM

NOTES:
1. Any discrepancy in the drawing to be immediately reported to the consultant or concerned engineer.
2. Drawing are not to be directly measured.
3. Read this drawing along with other related drawings and coordinate with Structural, Electrical, Plumbing and other services drawings.
4. Refer doors & windows schedule/elevations for size of doors & windows
5. Provide threshold at all exterior doors as per details, unless otherwise indicated.

Government Of Nepal
Department Of Education
Sanothimi, Bhaktapur, Nepal

Donor :
Japan International Cooperation Agency

Project Title:
Emergency School Reconstruction Project

ORIENTAL CONSULTANTS GLOBAL
Global Consulting for sustainable Development
Joint Venture with
MOHRI, ARCHITECT & ASSOCIATES, INC

Sub-Consultant:
EWES East West Engineering Service Pvt. Ltd.
P. Box-8621,Bansbari, Kathmandu, Nepal. web: ewesnepal.com
Tel: 9771-4373316, Fax:4650203, email- hbgewe@gmail.com

Mr. Tomoki Miyano	Mr. H.B. Gurung
Mr. Hisafumi Michikawa	Mr. A.S. Tamang
Mr. Wong Kuok Hung	Mr. S. Malla

Type Design :
2 STOREY 6 SMALL CLASSROOMS

Sheet Title :
GENERAL NOTES & TYPICAL DETAILS

Sheet No.
2-6C (S)

Date : September, 2016

Print Sheet : A'3' Size

S-00

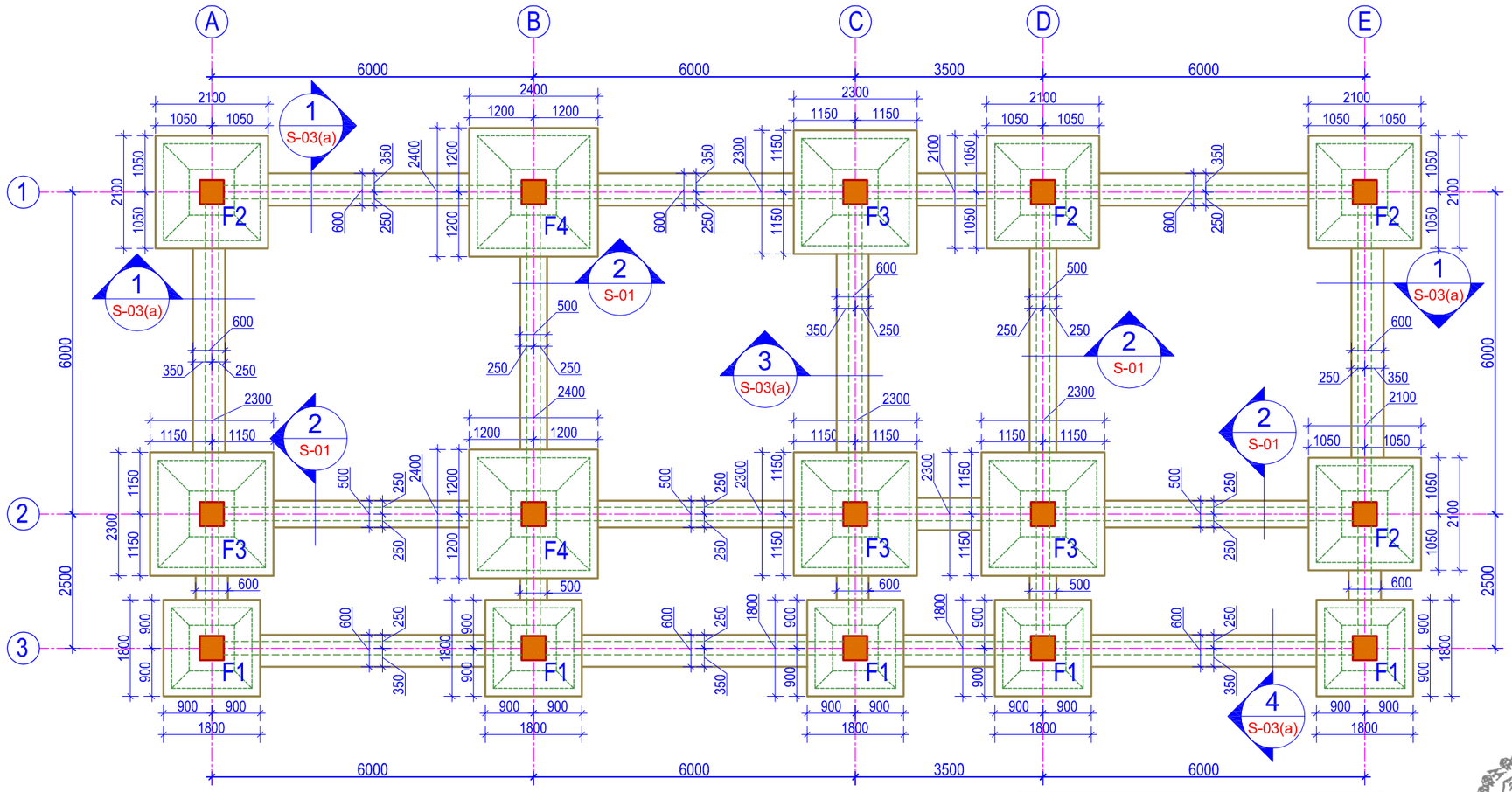

TRENCH PLAN

(Scale= 1:100)

FOOTING TABLE

S.N.	FOOTING	LENGTH	BREADTH	DEPTH
1	F1	1500	1500	250
2	F2	1800	1800	250
3	F3	2000	2000	250
4	F4	2100	2100	250

Footing Design for 2-6C(S)

Soil Bearing Capacity	Grid	Foundation Size L x B (mm)	Thickness (mm)	Reinforcement Each way (AS)
Above 180 kN/m^2	A1,C1,D1,E1,A2, E2,A3,B3,C3,D3, E3	1500 x1500	450	12Ø - 150 c/c
	B1,C2,D2	1700 x1700	450	12Ø - 150 c/c
	B2	2000 x2000	450	12Ø - 150 c/c
102-180 kN/m^2	A3,B3,C3,D3,E3	1500 x1500	450	12Ø - 150 c/c
	A1,D1,E1,E2	1800 x1800	450	12Ø - 150 c/c
	C1,A2,C2,D2	2000 x 2000	450	12Ø - 150 c/c
	B1,B2	2100 x 2100	450	12Ø - 150 c/c
50-100 kN/m^2	A3,E3	1500 x1500	450	12Ø - 150 c/c
	C3,D3	1700 x 1700	450	12Ø - 150 c/c
	E1	2500 x 2500	450	12Ø - 150 c/c
	B3	2000 x 2000	450	12Ø - 150 c/c
	A1,A2	2300 x 2300	450	12Ø - 150 c/c
	C1,D1,C2,D2,E2	2800 x 2800	450	12Ø - 150 c/c
	B1	3000 x 3000	450	12Ø - 150 c/c
	B2	3300 x 3300	450	12Ø - 150 c/c

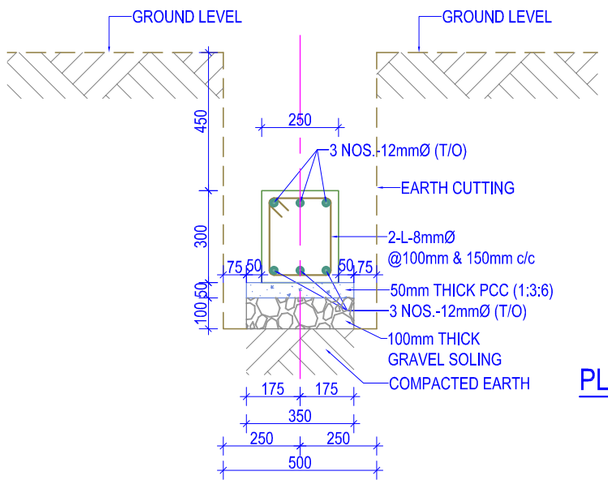

FOUNDATION BEAM TIE SECTION DETAIL AT -2

(SCALE = 1:20)

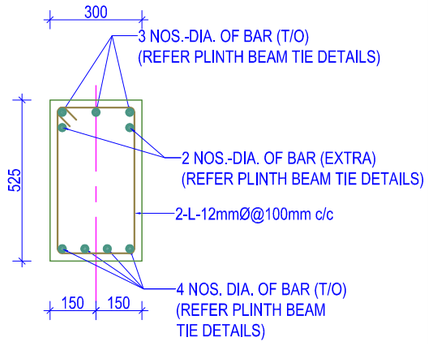

PLINTH BEAM TIE SECTION DETAIL AT -2

(SCALE = 1:20)

1:20 0 200MM 400MM 600MM 800MM 1M

1:100 0 1M 2M 3M 4M 5M

Government of Nepal
Ministry of Education
Central Level Project Implementation Unit
Gyaneshwor,Kathmandu

NOTES:

1. Any discrepancy in the drawing to be immediately reported to the consultant or concerned engineer.
2. Drawing are not to be directly measured.
3. Read this drawing along with other related drawings and coordinate with Structural, Electrical, Plumbing and other services drawings.
4. Refer doors & windows schedule/elevations for size of doors & windows
5. Provide threshold at all exterior doors as per details, unless otherwise indicated.

Government Of Nepal
Department Of Education
Sanothimi, Bhaktapur, Nepal

Donor :
Japan International Cooperation Agency

Project Title:
Emergency School Reconstruction Project

ORIENTAL CONSULTANTS GLOBAL
Global Consulting for sustainable Development
Joint Venture with
MOHRI, ARCHITECT & ASSOCIATES, INC

Sub-Consultant:
East West Engineering Service Pvt. Ltd.
P. Box-8621,Bansbari, Kathmandu, Nepal. web: ewesnepal.com
Tel: 9771-4373316, Fax:4650203, email- hbgewe@gmail.com

Mr. Tomoki Miyano	Mr. H.B. Gurung
Mr. Hisafumi Michikawa	Mr. A.S. Tamang
Mr. Wong Kuok Hung	Mr. S. Malla

Type Design :
2 STOREY 6 SMALL CLASSROOMS

Sheet Title :
TRENCH PLAN &
TIE BEAM DETAILS

Sheet No.
2-6C (S)

Date : September, 2016

Print Sheet : A'3' Size

S-01

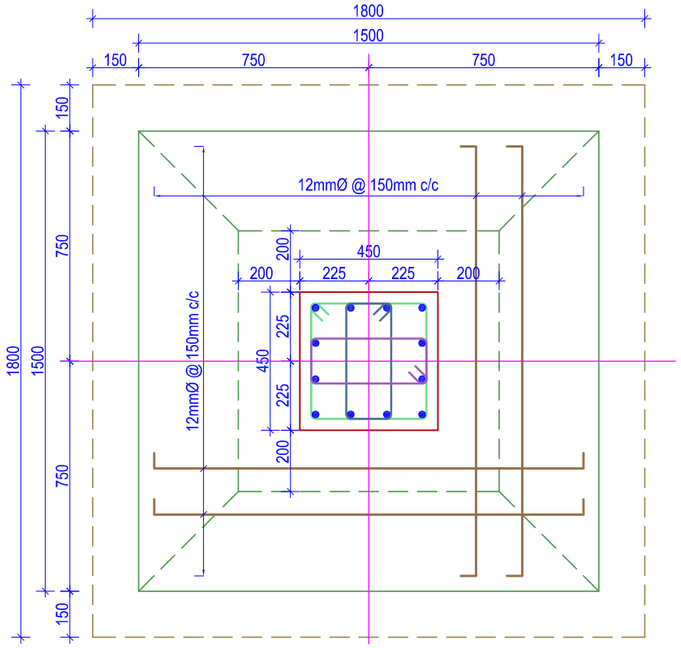

COLUMN FOOTING PLAN -F1

(Scale= 1:20)

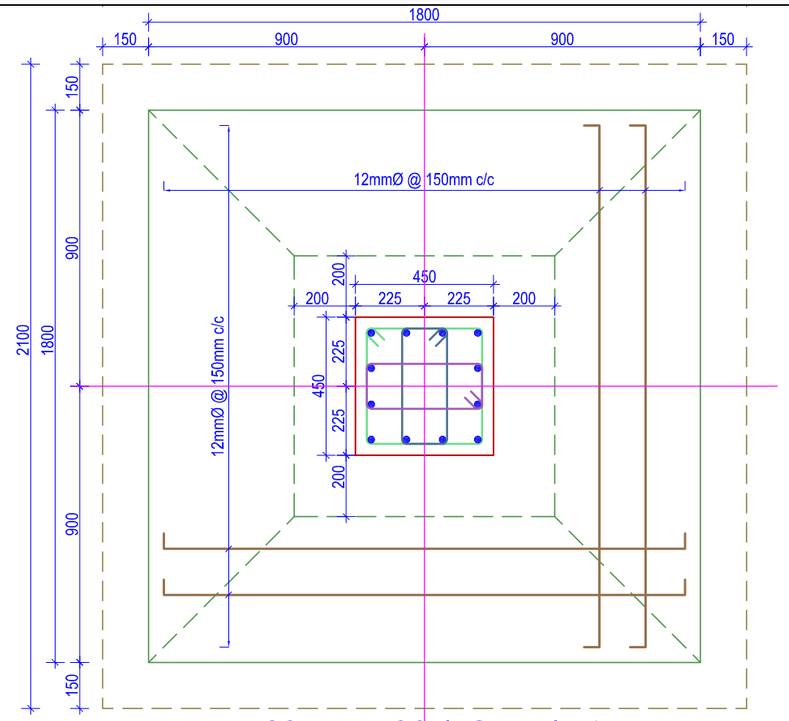

COLUMN FOOTING PLAN -F2

(Scale= 1:20)

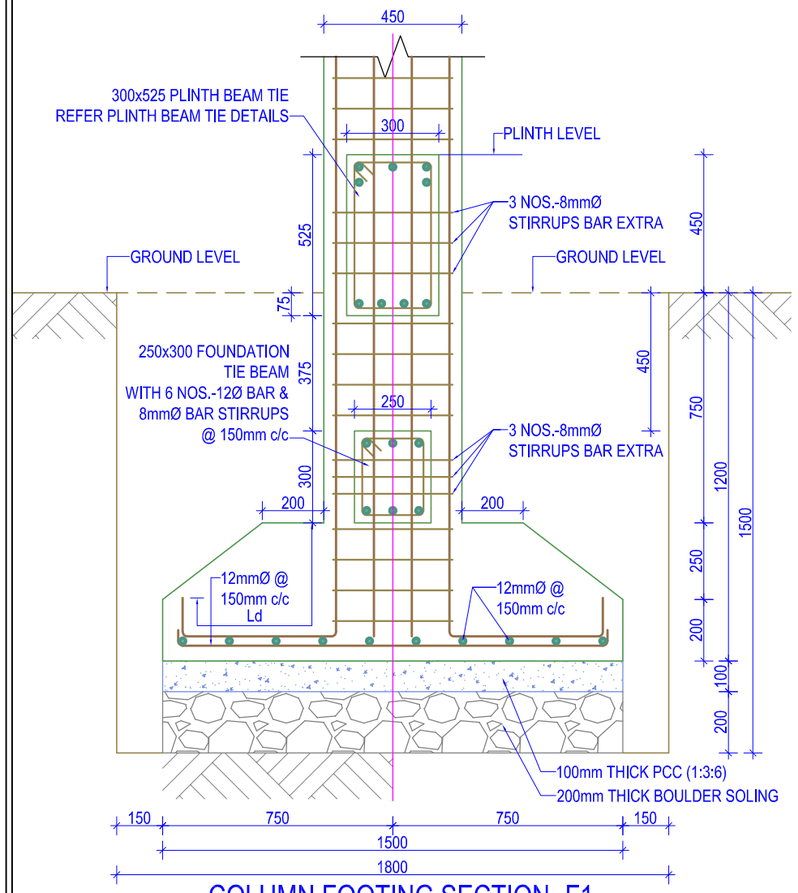

COLUMN FOOTING SECTION -F1

(Scale= 1:20)

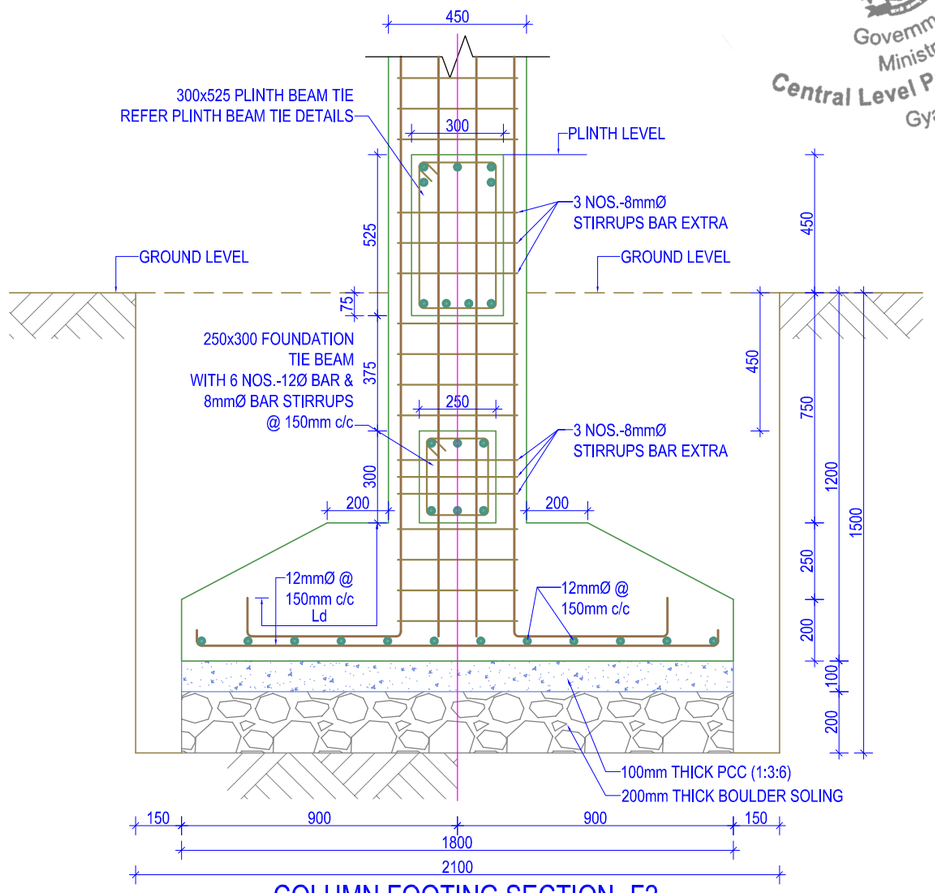

COLUMN FOOTING SECTION -F2

(Scale= 1:20)

Government of Nepal
Ministry of Education
Central Level Project Implementation Unit
Gyaneshwor,Kathmandu

1:20 0 200MM 400MM 600MM 800MM 1M

NOTES:

1. Any discrepancy in the drawing to be immediately reported to the consultant or concerned engineer.
2. Drawing are not to be directly measured.
3. Read this drawing along with other related drawings and coordinate with Structural, Electrical, Plumbing and other services drawings.
4. Refer doors & windows schedule/elevations for size of doors & windows
5. Provide threshold at all exterior doors as per details, unless otherwise indicated.

Government Of Nepal
Department Of Education
Sanothimi, Bhaktapur, Nepal

Donor :
Japan International Cooperation Agency

Project Title:
Emergency School Reconstruction Project

ORIENTAL CONSULTANTS GLOBAL
Global Consulting for sustainable Development
Joint Venture with
MOHRI, ARCHITECT & ASSOCIATES, INC

Sub-Consultant:
East West Engineering Service Pvt. Ltd.
P. Box-8621,Bansbari, Kathmandu, Nepal. web: ewesnepal.com
Tel: 9771-4373316, Fax:4650203, email- hbgewe@gmail.com

Mr. Tomoki Miyano	Mr. H.B. Gurung
Mr. Hisafumi Michikawa	Mr. A.S. Tamang
Mr. Wong Kuok Hung	Mr. S. Malla

Type Design :
2 STOREY 6 SMALL CLASSROOMS

Sheet Title :
FOOTING PLAN & SECTION

Sheet No.
2-6C (S)

Date : September, 2016

Print Sheet : A'3' Size

S-02

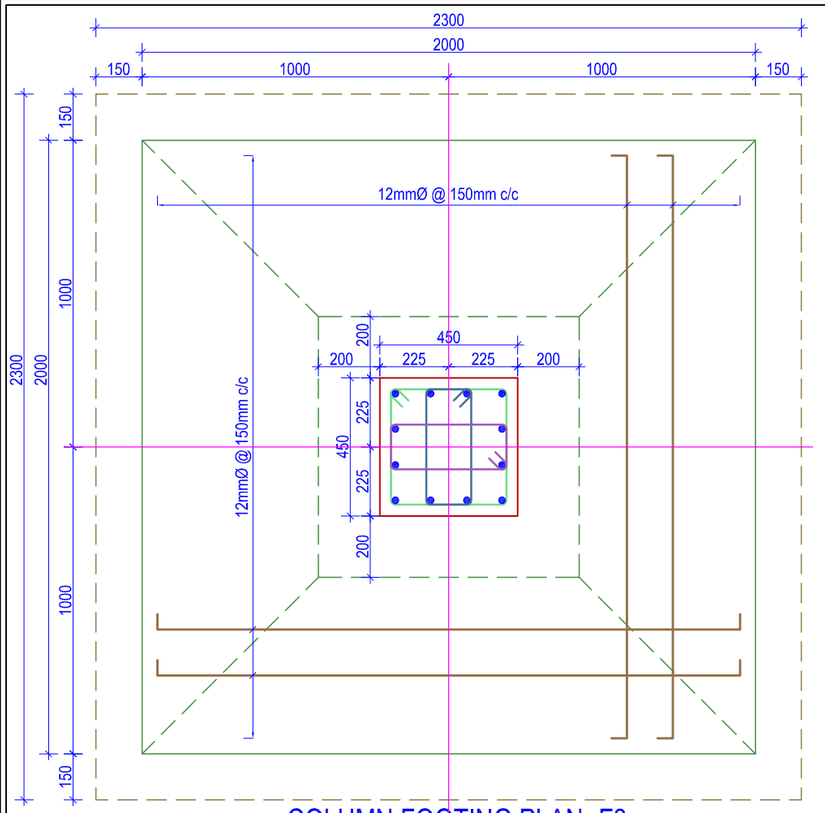

COLUMN FOOTING PLAN -F3

(Scale= 1:20)

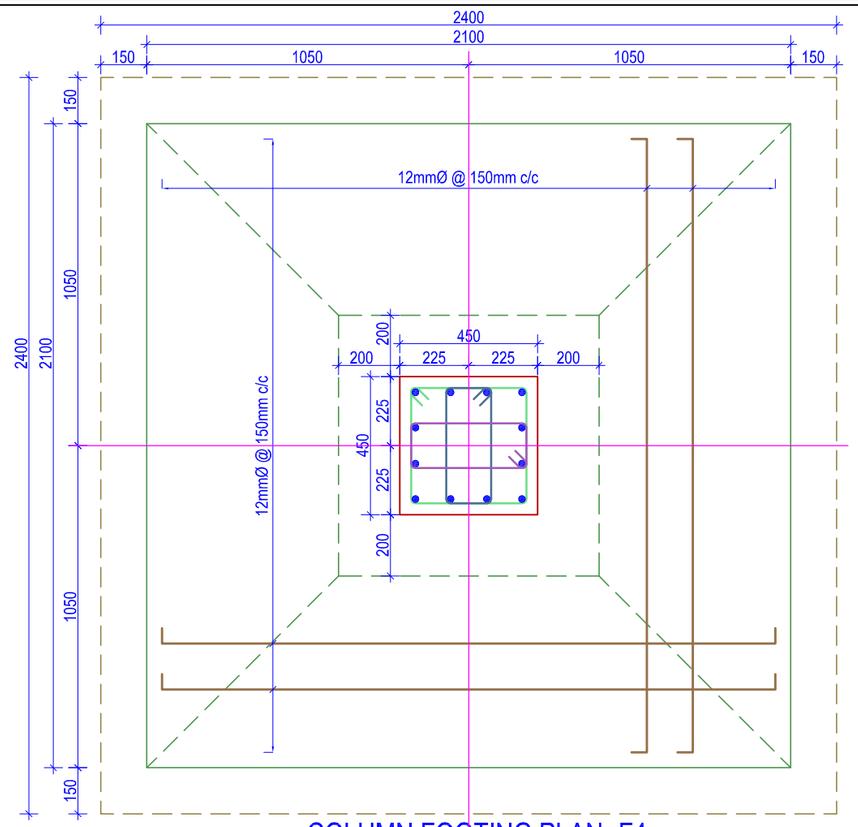

COLUMN FOOTING PLAN -F4

(Scale= 1:20)

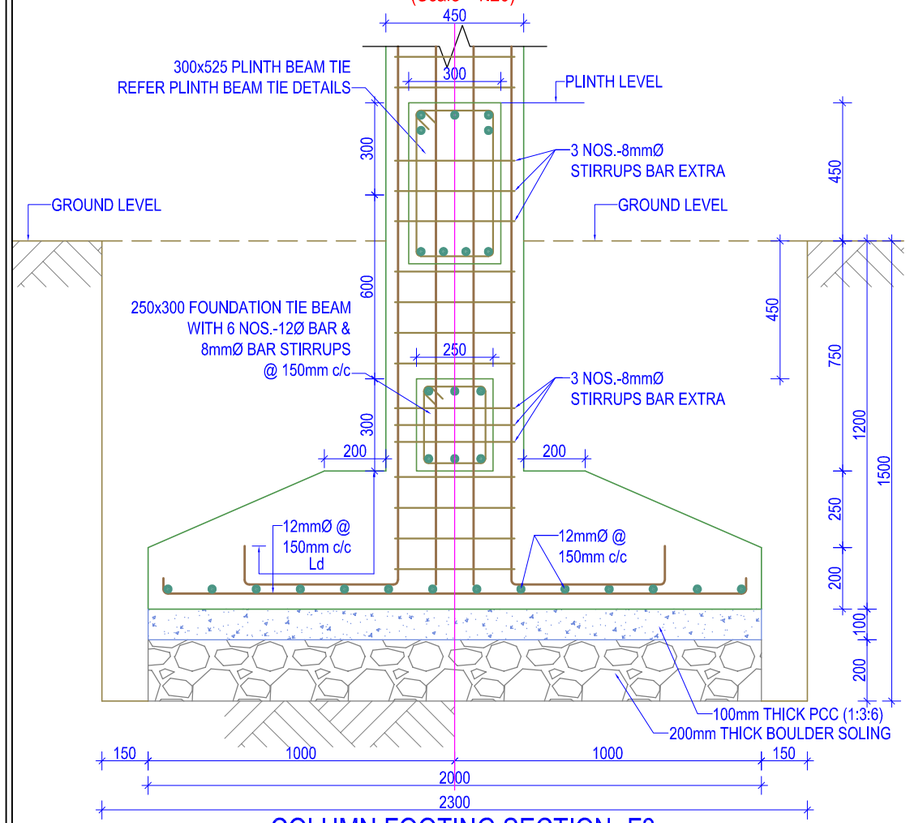

COLUMN FOOTING SECTION -F3

(Scale= 1:20)

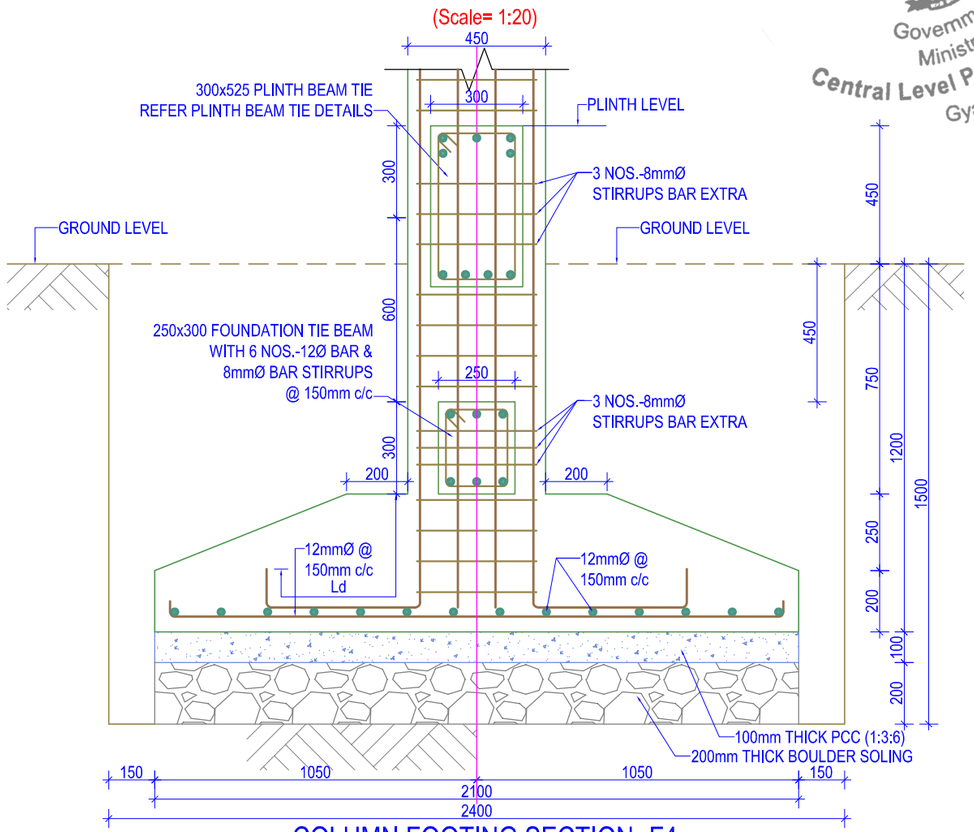

COLUMN FOOTING SECTION -F4

(Scale= 1:20)

1:20 0 200MM 400MM 600MM 800MM 1M

Government of Nepal
Ministry of Education
Central Level Project Implementation Unit
Gyaneshwor,Kathmandu

NOTES:

1. Any discrepancy in the drawing to be immediately reported to the consultant or concerned engineer.
2. Drawing are not to be directly measured.
3. Read this drawing along with other related drawings and coordinate with Structural, Electrical, Plumbing and other services drawings.
4. Refer doors & windows schedule/elevations for size of doors & windows
5. Provide threshold at all exterior doors as per details, unless otherwise indicated.

Government Of Nepal
Department Of Education
Sanothimi, Bhaktapur, Nepal

Donor :
Japan International Cooperation Agency

Project Title:
Emergency School Reconstruction Project

ORIENTAL CONSULTANTS GLOBAL
Global Consulting for sustainable Development
Joint Venture with
MOHRI, ARCHITECT & ASSOCIATES, INC

Sub-Consultant:
EWES East West Engineering Service Pvt. Ltd.
P. Box-8621,Bansbari, Kathmandu, Nepal. web: ewesnepal.com
Tel: 9771-4373316, Fax:4650203, email- hbgewe@gmail.com

Mr. Tomoki Miyano	Mr. H.B. Gurung
Mr. Hisafumi Michikawa	Mr. A.S. Tamang
Mr. Wong Kuok Hung	Mr. S. Malla

Type Design :
2 STOREY 6 SMALL CLASSROOMS

Sheet Title :
FOOTING PLAN & SECTION,

Sheet No.
2-6C (S)

Date : September, 2016

Print Sheet : A'3' Size

S-03

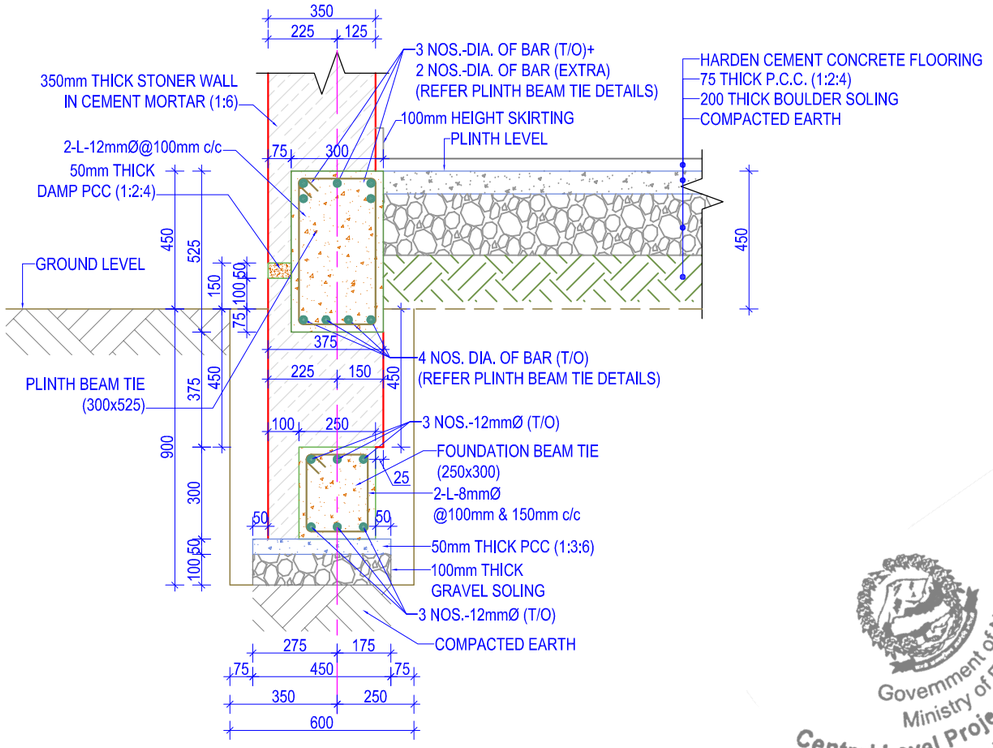

WALL FOUNDATION DETAIL SECTION AT -1

(Scale= 1:20)

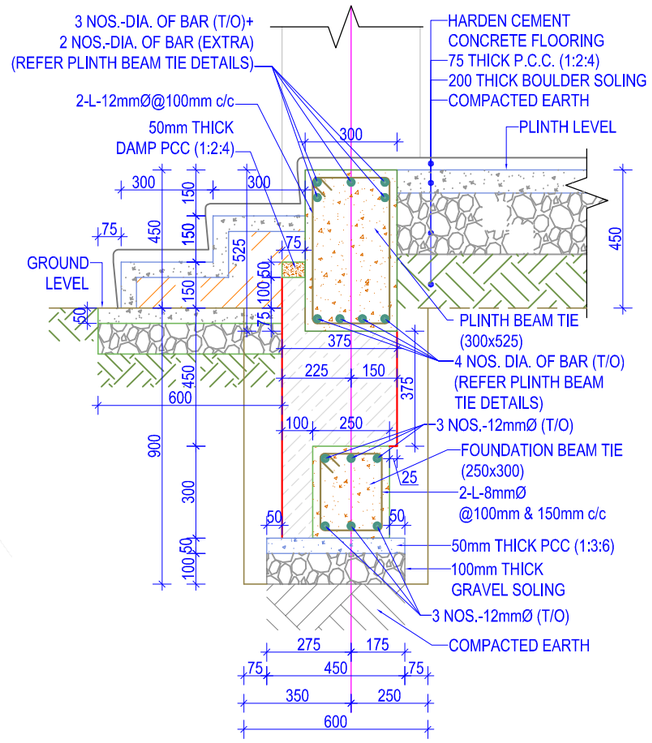

WALL FOUNDATION DETAIL SECTION AT -4

(Scale= 1:20)

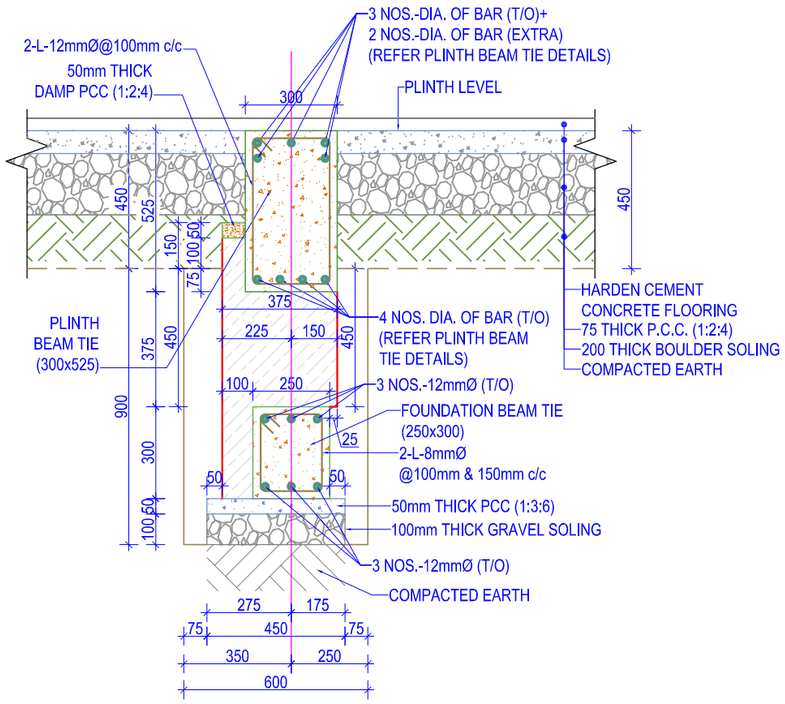

WALL FOUNDATION DETAIL SECTION AT -3

(Scale= 1:20)

Government of Nepal
Ministry of Education
Central Level Project Implementation Unit
Gyaneshwor,Kathmandu

1:20 0 200MM 400MM 600MM 800MM 1M

NOTES:

1. Any discrepancy in the drawing to be immediately reported to the consultant or concerned engineer.
2. Drawing are not to be directly measured.
3. Read this drawing along with other related drawings and coordinate with Structural, Electrical, Plumbing and other services drawings.
4. Refer doors & windows schedule/elevations for size of doors & windows
5. Provide threshold at all exterior doors as per details, unless otherwise indicated.

Government Of Nepal
Department Of Education
Sanothimi, Bhaktapur, Nepal

Donor :
Japan International Cooperation Agency

Project Title:
Emergency School Reconstruction Project

ORIENTAL CONSULTANTS GLOBAL
Global Consulting for sustainable Development
Joint Venture with
MOHRI, ARCHITECT & ASSOCIATES, INC

Sub-Consultant:
East West Engineering Service Pvt. Ltd.
P. Box-8621,Bansbari, Kathmandu, Nepal. web: ewesnepal.com
Tel: 9771-4373316, Fax:4650203, email- hbgewe@gmail.com

Mr. Tomoki Miyano	Mr. H.B. Gurung
Mr. Hisafumi Michikawa	Mr. A.S. Tamang
Mr. Wong Kuok Hung	Mr. S. Malla

Type Design :
2 STOREY 6 SMALL CLASSROOMS

Sheet Title :
WALL FOUNDATION DETAILS

Sheet No.
2-6C (S)

Date : September, 2016

Print Sheet : A'3' Size

S-03.a

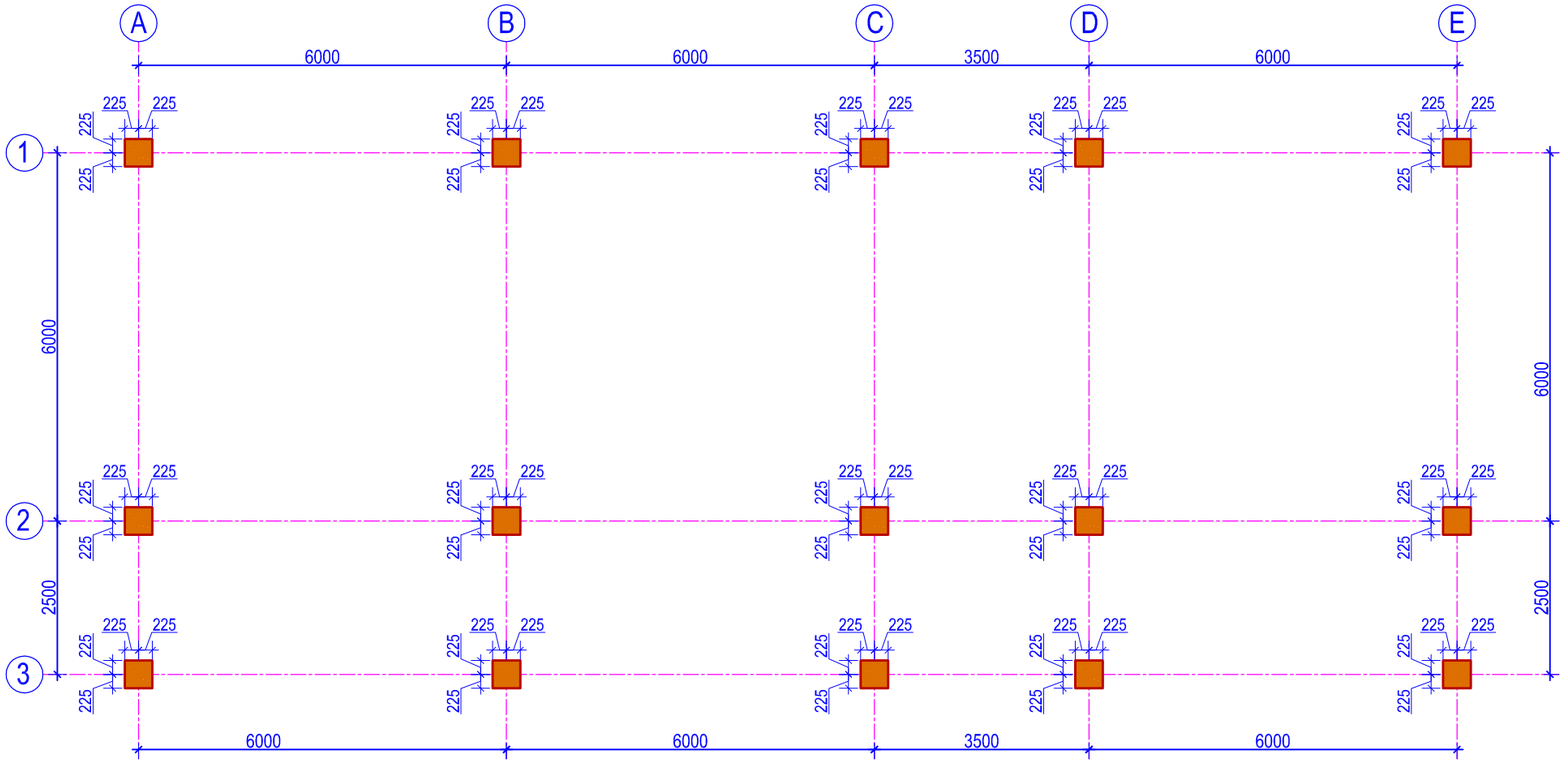

COLUMN LAYOUT PLAN

(Scale= 1:100)

COLUMN REINFORCEMENT DETAILS AT GRID -1

S. NO.	GRID	GRID -A COLUMN SIZE (450 x 450)	GRID -B COLUMN SIZE (450 x 450)	GRID -C COLUMN SIZE (450 x 450)	GRID -D COLUMN SIZE (450 x 450)	GRID -E COLUMN SIZE (450 x 450)	STIRRUPS
1	FIRST FLOOR	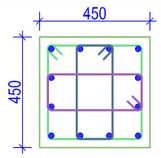 6 NOS. -16mmØ 6 NOS. -12mmØ	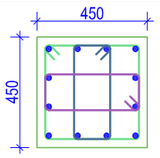 6 NOS. -16mmØ 6 NOS. -12mmØ	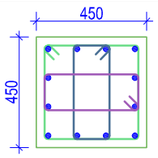 6 NOS. -16mmØ 6 NOS. -12mmØ	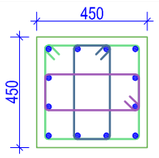 6 NOS. -16mmØ 6 NOS. -12mmØ	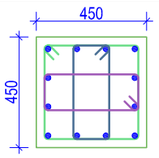 6 NOS. -16mmØ 6 NOS. -12mmØ	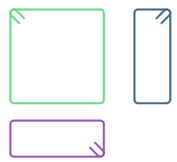 8Ø@100mmc/c & 150mmc/c
2	GROUND FLOOR	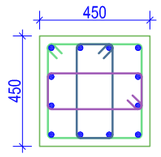 12 NOS. -16mmØ	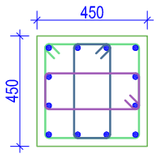 12 NOS. -16mmØ	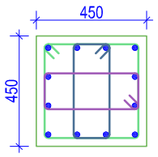 12 NOS. -16mmØ	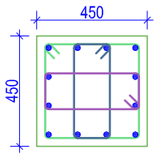 12 NOS. -16mmØ	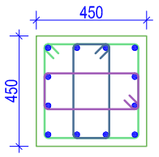 12 NOS. -16mmØ	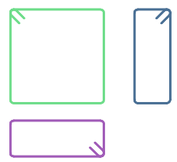 8Ø@100mmc/c & 150mmc/c

Government of Nepal
Ministry of Education
Central Level Project Implementation Unit
Gyaneshwor,Kathmandu

1:25 0 250MM 500MM 750MM 1M 1.25M

1:100 0 1M 2M 3M 4M 5M

NOTES:

1. Any discrepancy in the drawing to be immediately reported to the consultant or concerned engineer.
2. Drawing are not to be directly measured.
3. Read this drawing along with other related drawings and coordinate with Structural, Electrical, Plumbing and other services drawings.
4. Refer doors & windows schedule/elevations for size of doors & windows
5. Provide threshold at all exterior doors as per details, unless otherwise indicated.

Government Of Nepal
Department Of Education
Sanothimi, Bhaktapur, Nepal

Donor : Japan International Cooperation Agency

Project Title:
Emergency School Reconstruction Project

ORIENTAL CONSULTANTS GLOBAL
Global Consulting for sustainable Development
Joint Venture with
MOHRI, ARCHITECT & ASSOCIATES, INC

Sub-Consultant:
East West Engineering Service Pvt. Ltd.
P. Box-8621,Bansbari, Kathmandu, Nepal. web: ewesnepal.com
Tel: 9771-4373316, Fax:4650203, email- hbgewe@gmail.com

Mr. Tomoki Miyano	Mr. H.B. Gurung
Mr. Hisafumi Michikawa	Mr. A.S. Tamang
Mr. Wong Kuok Hung	Mr. S. Malla

Type Design :
2 STOREY 6 SMALL CLASSROOMS

Sheet Title :
COLUMN LAYOUT PLAN & DETAILS

Sheet No. 2-6C (S)

Date : September, 2016

Print Sheet : A'3' Size

S-04

COLUMN REINFORCEMENT DETAILS AT GRID -2

S. NO.	GRID	GRID -A COLUMN SIZE (450 x 450)	GRID -B COLUMN SIZE (450 x 450)	GRID -C COLUMN SIZE (450 x 450)	GRID -D COLUMN SIZE (450 x 450)	GRID -E COLUMN SIZE (450 x 450)	STIRRUPS
1	FIRST FLOOR	12 NOS. -16mmØ	12 NOS. -16mmØ	12 NOS. -16mmØ	12 NOS. -16mmØ	12 NOS. -16mmØ	8Ø@100mmc/c & 150mmc/c
2	GROUND FLOOR	12 NOS. -16mmØ	12 NOS. -16mmØ	12 NOS. -16mmØ	12 NOS. -16mmØ	12 NOS. -16mmØ	8Ø@100mmc/c & 150mmc/c

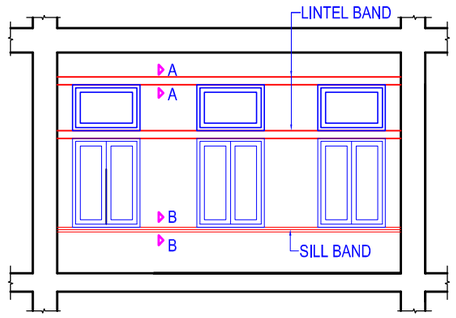

ELEVATION OF WALL WITH LINTEL & SILL BAND

(Scale= NTS)

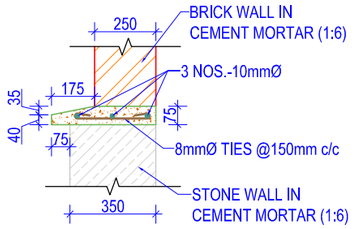

X-SECTION OF SILL BAND AT B-B

(STONE MASONRY)

(Scale= 1:25)

COLUMN REINFORCEMENT DETAILS AT GRID -3

S. NO.	GRID	GRID -A COLUMN SIZE (450 x 450)	GRID -B COLUMN SIZE (450 x 450)	GRID -C COLUMN SIZE (450 x 450)	GRID -D COLUMN SIZE (450 x 450)	GRID -E COLUMN SIZE (450 x 450)	STIRRUPS
1	FIRST FLOOR	6 NOS. -16mmØ 6 NOS. -12mmØ	6 NOS. -16mmØ 6 NOS. -12mmØ	12 NOS. -16mmØ	12 NOS. -16mmØ	6 NOS. -16mmØ 6 NOS. -12mmØ	8Ø@100mmc/c & 150mmc/c
2	GROUND FLOOR	12 NOS. -16mmØ	12 NOS. -16mmØ	4 NOS. -20mmØ 8 NOS. -16mmØ	4 NOS. -20mmØ 8 NOS. -16mmØ	12 NOS. -16mmØ	8Ø@100mmc/c & 150mmc/c

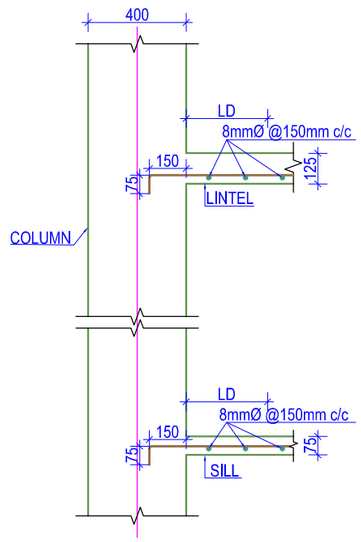

COLUMN ,LINTEL& SILL JOINT DETAIL

(Scale= 1:25)

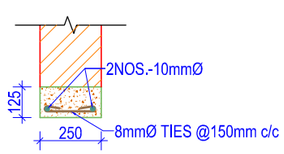

X-SECTION OF LINTEL BAND AT A-A

(Scale= 1:25)

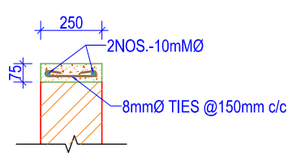

X-SECTION OF SILL BAND AT B-B

(Scale= 1:25)

1:25 0 250MM 500MM 750MM 1M 1.25M

NOTES:

1. Any discrepancy in the drawing to be immediately reported to the consultant or concerned engineer.
2. Drawing are not to be directly measured.
3. Read this drawing along with other related drawings and coordinate with Structural, Electrical, Plumbing and other services drawings.
4. Refer doors & windows schedule/elevations for size of doors & windows
5. Provide threshold at all exterior doors as per details, unless otherwise indicated.

Government Of Nepal
Department Of Education
Sanothimi, Bhaktapur, Nepal

Donor : Japan International Cooperation Agency

Project Title:
Emergency School Reconstruction Project

ORIENTAL CONSULTANTS GLOBAL
Global Consulting for sustainable Development
Joint Venture with
MOHRI, ARCHITECT & ASSOCIATES, INC

Sub-Consultant:
East West Engineering Service Pvt. Ltd.
P. Box-8621,Bansbari, Kathmandu, Nepal. web: ewesnepal.com
Tel: 9771-4373316, Fax:4650203, email- hbgewe@gmail.com

Mr. Tomoki Miyano	Mr. H.B. Gurung
Mr. Hisafumi Michikawa	Mr. A.S. Tamang
Mr. Wong Kuok Hung	Mr. S. Malla

Type Design :
2 STOREY 6 SMALL CLASSROOMS

Sheet Title :
COLUMN DETAILS &
SILL & LINTEL DETAILS

Sheet No. 2-6C (S)

Date : September, 2016

Print Sheet : A'3' Size

S-05

Government of Nepal
Ministry of Education
Central Level Project Implementation Unit
Gyaneshwor,Kathmandu

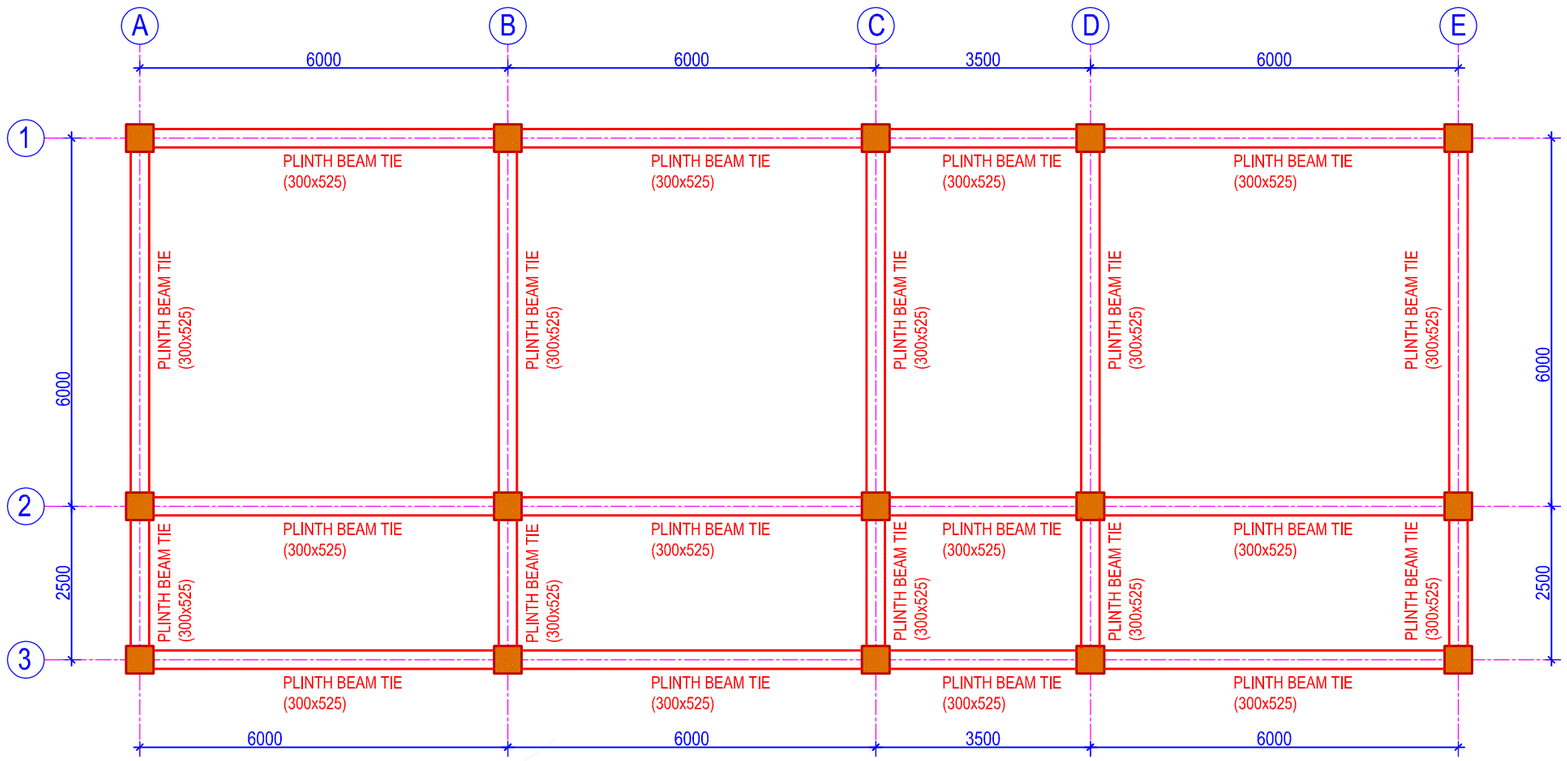

PLINTH BEAM TIE PLAN AT PLINTH LEVEL

(Scale= 1:100)

Government of Nepal
Ministry of Education
Central Level Project Implementation Unit
Gyaneshwor, Kathmandu

1:100 0 1M 2M 3M 4M 5M

NOTES:

1. Any discrepancy in the drawing to be immediately reported to the consultant or concerned engineer.
2. Drawing are not to be directly measured.
3. Read this drawing along with other related drawings and coordinate with Structural, Electrical, Plumbing and other services drawings.
4. Refer doors & windows schedule/elevations for size of doors & windows
5. Provide threshold at all exterior doors as per details, unless otherwise indicated.

Government Of Nepal
Department Of Education
Sanothimi, Bhaktapur, Nepal

Donor : Japan International Cooperation Agency

Project Title:
Emergency School Reconstruction Project

ORIENTAL CONSULTANTS GLOBAL
Global Consulting for sustainable Development
Joint Venture with
MOHRI, ARCHITECT & ASSOCIATES, INC

Sub-Consultant:
EWES East West Engineering Service Pvt. Ltd.
P. Box-8621,Bansbari, Kathmandu, Nepal. web: ewesnepal.com
Tel: 9771-4373316, Fax:4650203, email- hbgewe@gmail.com

Mr. Tomoki Miyano	Mr. H.B. Gurung
Mr. Hisafumi Michikawa	Mr. A.S. Tamang
Mr. Wong Kuok Hung	Mr. S. Malla

Type Design :
2 STOREY 6 SMALL CLASSROOMS

Sheet Title :
PLINTH BEAM TIE PLAN

Sheet No.
2-6C (S)

Date : September, 2016

Print Sheet : A'3' Size

S-06

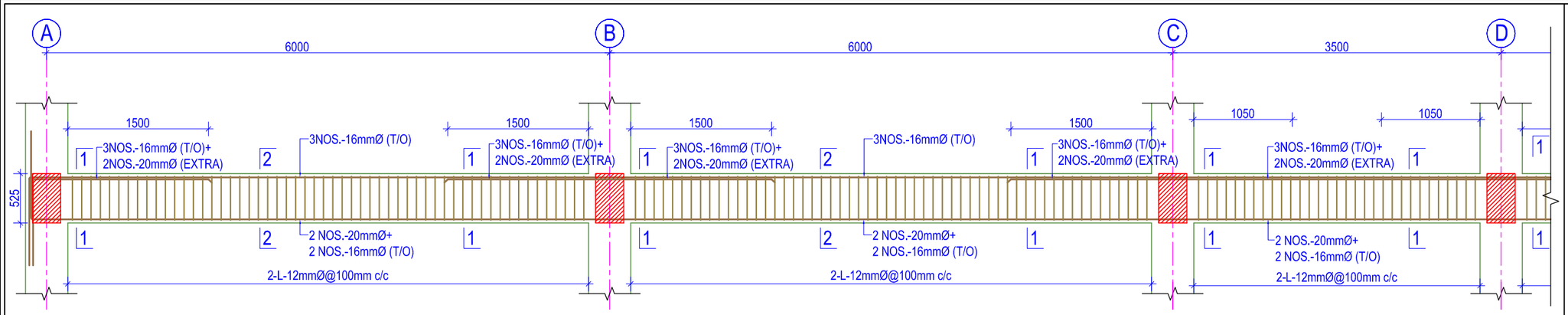

PLINTH BEAM TIE DETAIL ALONG GRID AT -1 & 2

(SCALE = 1:50)

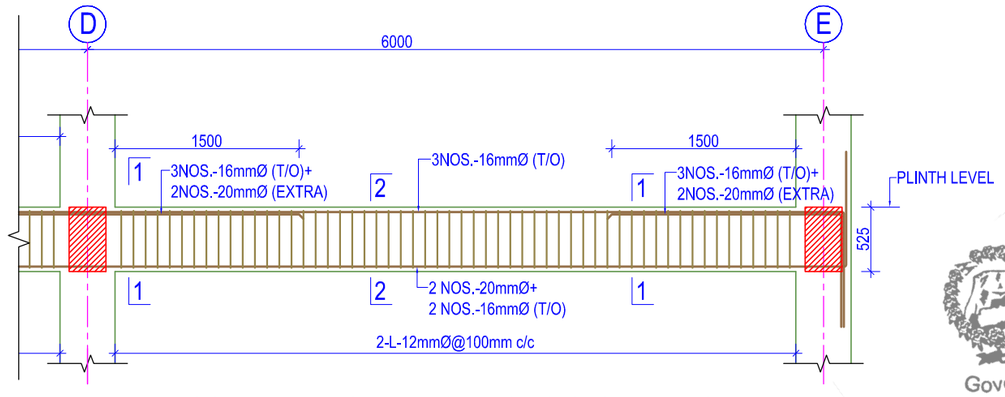

PLINTH BEAM TIE DETAIL ALONG GRID AT -1 & 2

(SCALE = 1:50)

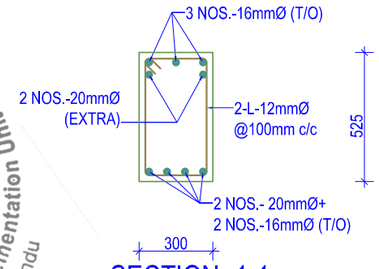

SECTION -1-1

(SCALE = 1:25)

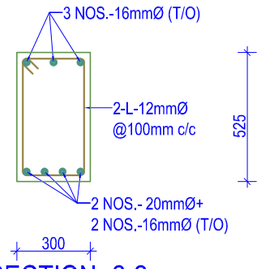

SECTION -2-2

(SCALE = 1:25)

Government of Nepal
Ministry of Education
Central Level Project Implementation Unit
Gyaneshwor,Kathmandu

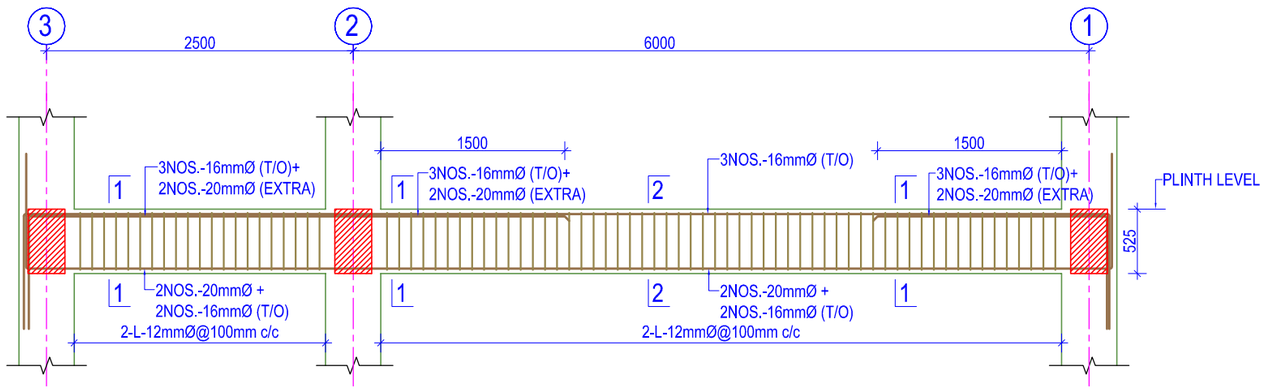

PLINTH BEAM TIE DETAIL ALONG GRID AT -A, C, D & E

(SCALE = 1:50)

0 250MM 500MM 750MM 1M 1.25M
1:25

0 500MM 1M 1.5M 2M 2.5M
1:50

NOTES:

1. Any discrepancy in the drawing to be immediately reported to the consultant or concerned engineer.
2. Drawing are not to be directly measured.
3. Read this drawing along with other related drawings and coordinate with Structural, Electrical, Plumbing and other services drawings.
4. Refer doors & windows schedule/elevations for size of doors & windows
5. Provide threshold at all exterior doors as per details, unless otherwise indicated.

Government Of Nepal
Department Of Education
Sanothimi, Bhaktapur, Nepal

Donor :
Japan International Cooperation Agency

Project Title:
Emergency School Reconstruction Project

ORIENTAL CONSULTANTS GLOBAL
Global Consulting for sustainable Development
Joint Venture with
MOHRI, ARCHITECT & ASSOCIATES, INC

Sub-Consultant:
East West Engineering Service Pvt. Ltd.
P. Box-8621,Bansbari, Kathmandu, Nepal. web: ewesnepal.com
Tel: 9771-4373316, Fax:4650203, email- hbgewe@gmail.com

Mr. Tomoki Miyano	Mr. H.B. Gurung
Mr. Hisafumi Michikawa	Mr. A.S. Tamang
Mr. Wong Kuok Hung	Mr. S. Malla

Type Design :
2 STOREY 6 SMALL CLASSROOMS

Sheet Title :
PLINTH BEAM TIE DETAILS

Sheet No.
2-6C (S)

Date : September, 2016

Print Sheet : A'3' Size

S-07

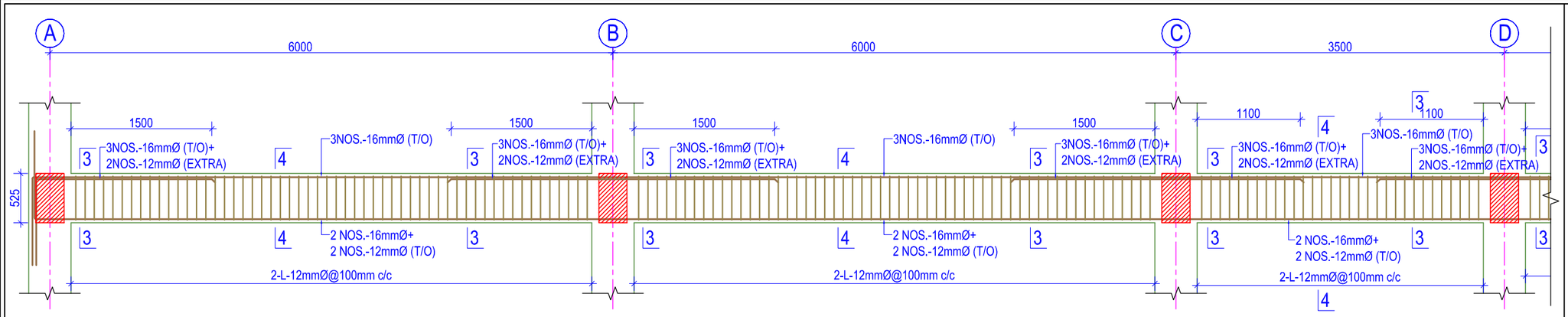

PLINTH BEAM TIE DETAIL ALONG GRID AT -3

(SCALE = 1:50)

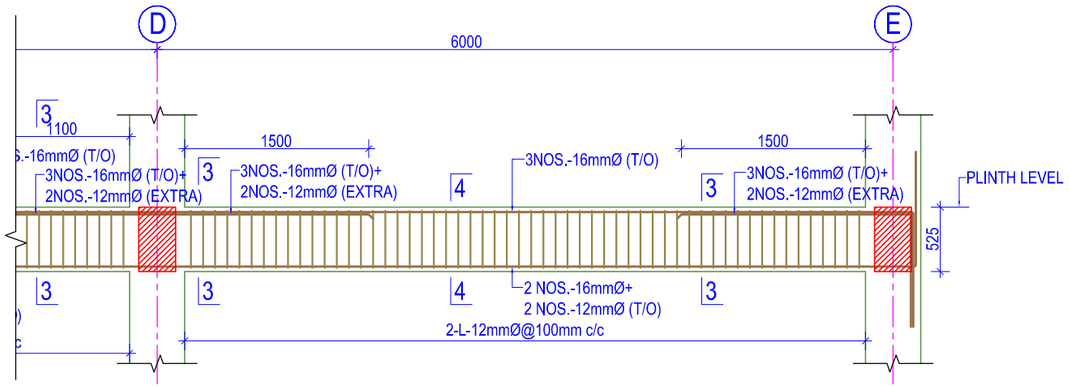

PLINTH BEAM TIE DETAIL ALONG GRID AT -3

(SCALE = 1:50)

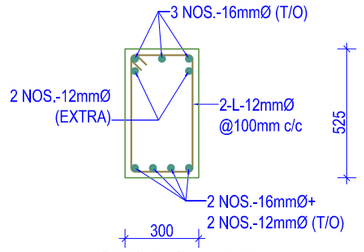

SECTION -3-3

(SCALE = 1:25)

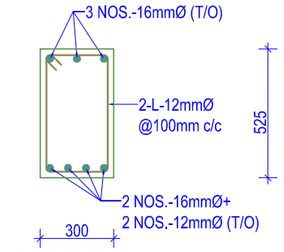

SECTION -4-4

(SCALE = 1:25)

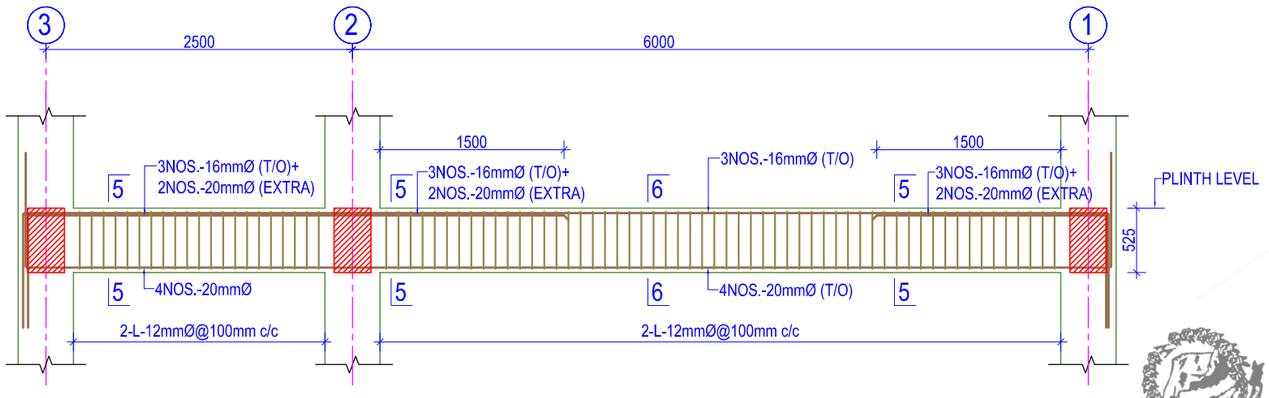

PLINTH BEAM TIE DETAIL ALONG GRID AT -B

(SCALE = 1:50)

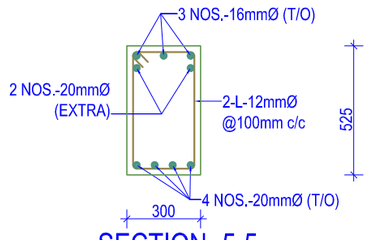

SECTION -5-5

(SCALE = 1:25)

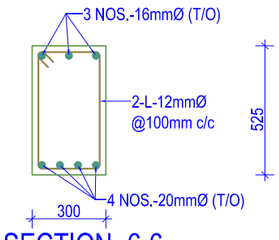

SECTION -6-6

(SCALE = 1:25)

Government of Nepal
Ministry of Education
Central Level Project Implementation Unit
Gyaneshwor,Kathmandu

1:25 — 0, 250MM, 500MM, 750MM, 1M, 1.25M

1:50 — 0, 500MM, 1M, 1.5M, 2M, 2.5M

NOTES:

1. Any discrepancy in the drawing to be immediately reported to the consultant or concerned engineer.
2. Drawing are not to be directly measured.
3. Read this drawing along with other related drawings and coordinate with Structural, Electrical, Plumbing and other services drawings.
4. Refer doors & windows schedule/elevations for size of doors & windows
5. Provide threshold at all exterior doors as per details, unless otherwise indicated.

Government Of Nepal
Department Of Education
Sanothimi, Bhaktapur, Nepal

Donor : Japan International Cooperation Agency

Project Title:
Emergency School Reconstruction Project

ORIENTAL CONSULTANTS GLOBAL
Global Consulting for sustainable Development
Joint Venture with
MOHRI, ARCHITECT & ASSOCIATES, INC

Sub-Consultant:
EWES East West Engineering Service Pvt. Ltd.
P. Box-8621,Bansbari, Kathmandu, Nepal. web: ewesnepal.com
Tel: 9771-4373316, Fax:4650203, email- hbgewe@gmail.com

Mr. Tomoki Miyano	Mr. H.B. Gurung
Mr. Hisafumi Michikawa	Mr. A.S. Tamang
Mr. Wong Kuok Hung	Mr. S. Malla

Type Design :
2 STOREY 6 SMALL CLASSROOMS

Sheet Title :
PLINTH BEAM TIE DETAILS

Sheet No.
2-6C (S)

Date : September, 2016

Print Sheet : A'3' Size

S-08

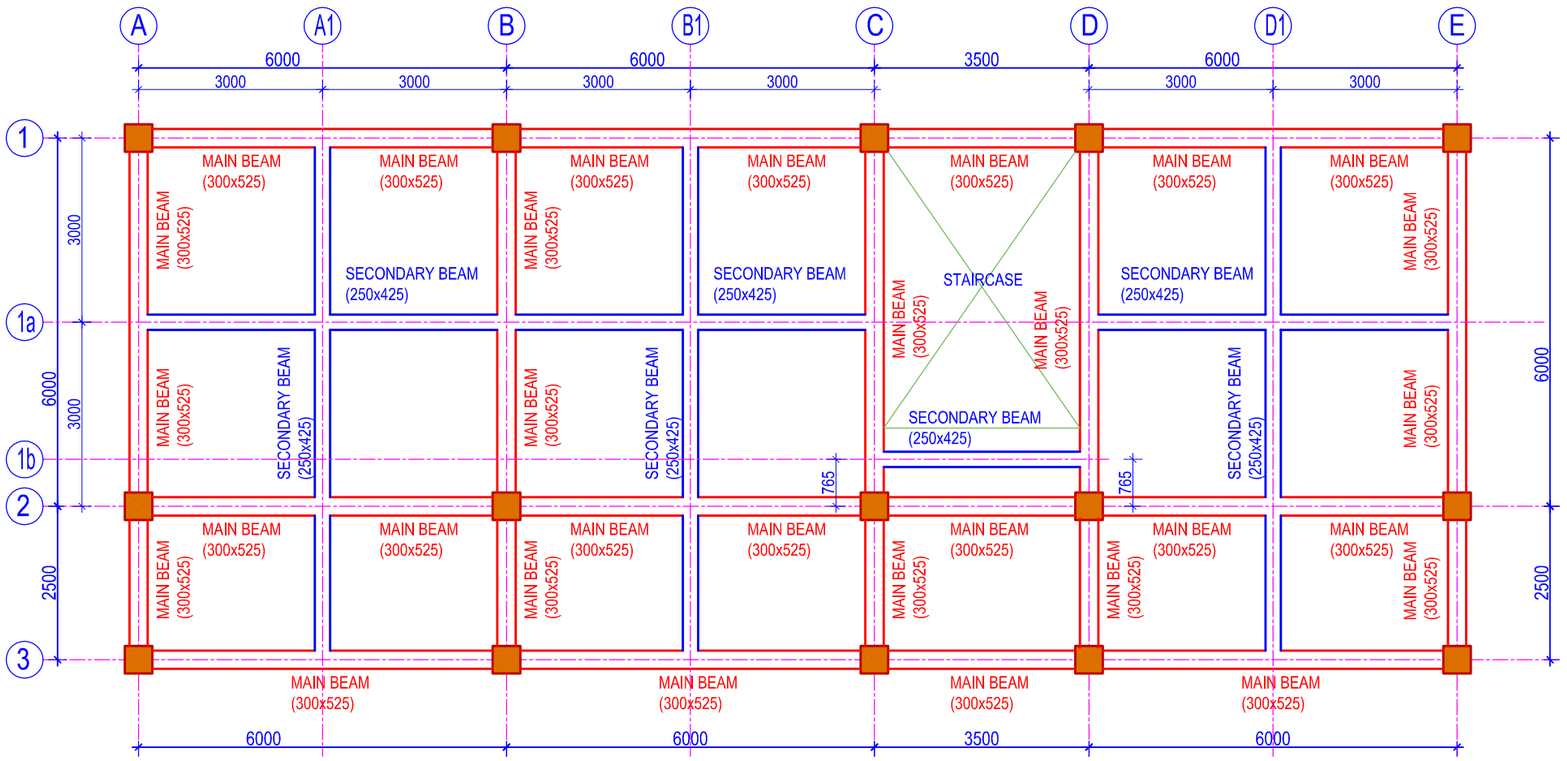

BEAM PLAN AT FIRST FLOOR LEVEL

(Scale= 1:100)

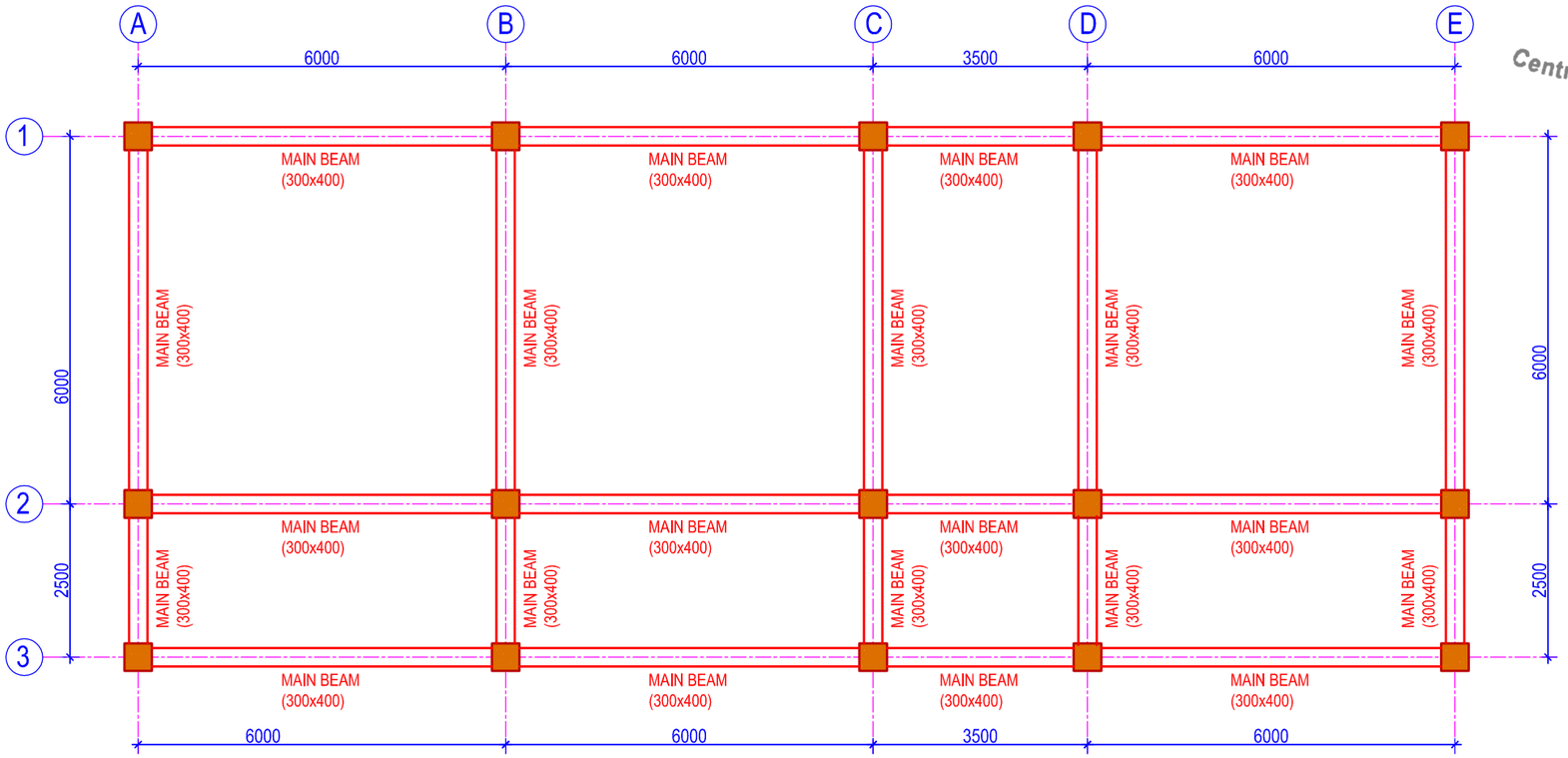

BEAM PLAN AT TRUSS LEVEL

(Scale= 1:100)

1:100 0 1M 2M 3M 4M 5M

Government of Nepal
Ministry of Education
Central Level Project Implementation Unit
Gyaneshwor, Kathmandu

NOTES:

1. Any discrepancy in the drawing to be immediately reported to the consultant or concerned engineer.
2. Drawing are not to be directly measured.
3. Read this drawing along with other related drawings and coordinate with Structural, Electrical, Plumbing and other services drawings.
4. Refer doors & windows schedule/elevations for size of doors & windows
5. Provide threshold at all exterior doors as per details, unless otherwise indicated.

Government Of Nepal
Department Of Education
Sanothimi, Bhaktapur, Nepal

Donor :
Japan International Cooperation Agency

Project Title:
Emergency School Reconstruction Project

ORIENTAL CONSULTANTS GLOBAL
Global Consulting for sustainable Development
Joint Venture with
MOHRI, ARCHITECT & ASSOCIATES, INC

Sub-Consultant:
East West Engineering Service Pvt. Ltd.
P. Box-8621,Bansbari, Kathmandu, Nepal. web: ewesnepal.com
Tel: 9771-4373316, Fax:4650203, email- hbgewe@gmail.com

Mr. Tomoki Miyano	Mr. H.B. Gurung
Mr. Hisafumi Michikawa	Mr. A.S. Tamang
Mr. Wong Kuok Hung	Mr. S. Malla

Type Design :
2 STOREY 6 SMALL CLASSROOMS

Sheet Title :
BEAM PLANS
(FIRST FLOOR & TRUSS LEVEL)

Sheet No.
2-6C (S)

Date : September, 2016

Print Sheet : A'3' Size

S-09

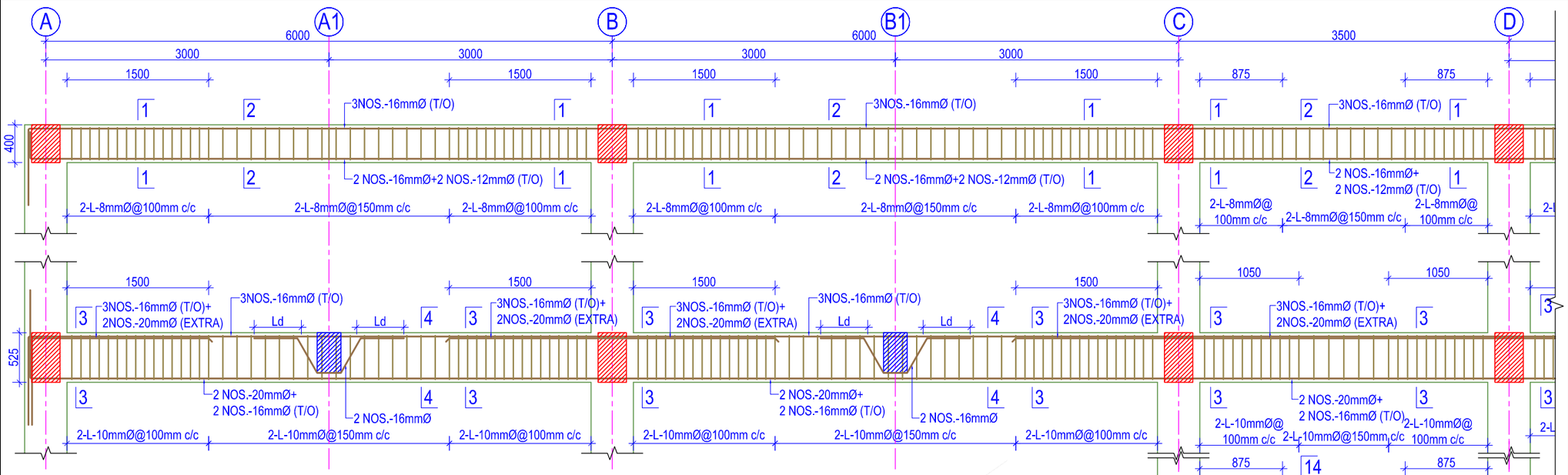

BEAM DETAIL ALONG GRID AT -1

(SCALE = 1:50)

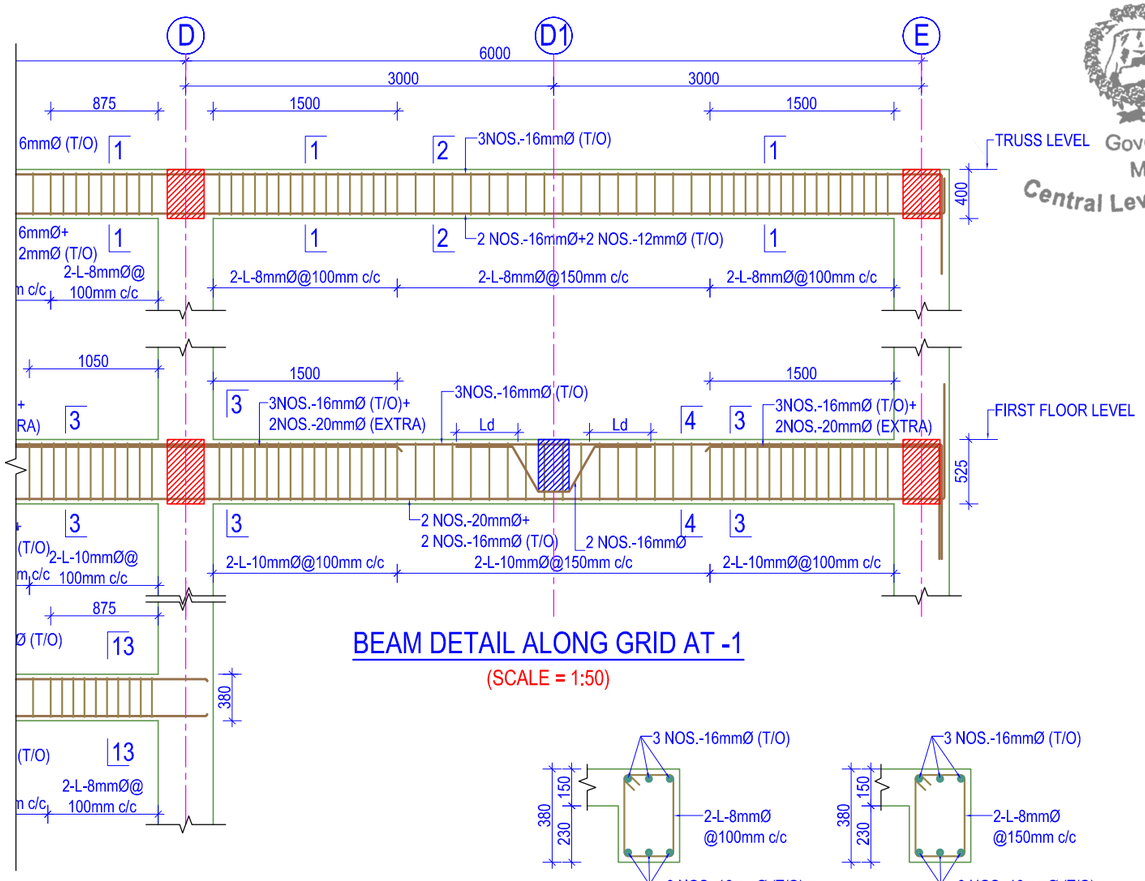

BEAM DETAIL ALONG GRID AT -1

(SCALE = 1:50)

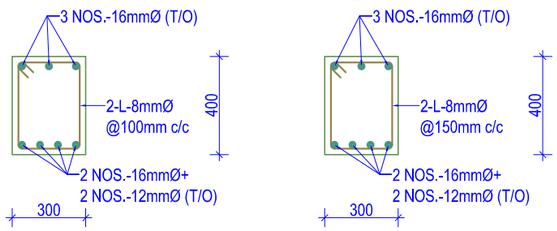

SECTION -1-1

(SCALE = 1:25)

SECTION -2-2

(SCALE = 1:25)

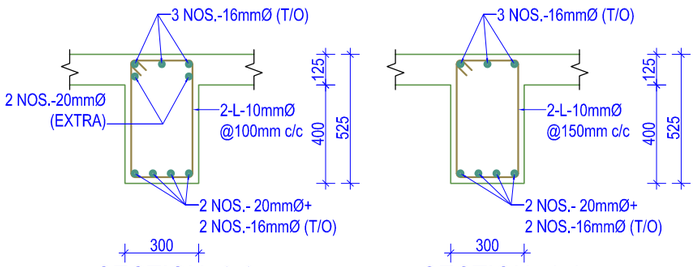

SECTION -3-3

(SCALE = 1:25)

SECTION -4-4

(SCALE = 1:25)

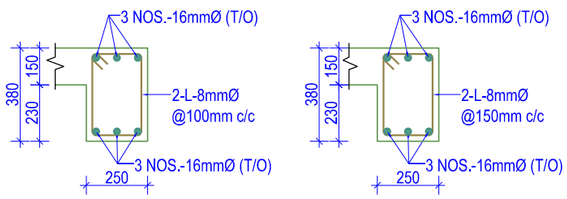

SECTION -13-13

(Scale= 1:25)

SECTION -14-14

(Scale= 1:25)

1:25 — 0, 250MM, 500MM, 750MM, 1M, 1.25M

1:50 — 0, 500MM, 1M, 1.5M, 2M, 2.5M

NOTES:

1. Any discrepancy in the drawing to be immediately reported to the consultant or concerned engineer.
2. Drawing are not to be directly measured.
3. Read this drawing along with other related drawings and coordinate with Structural, Electrical, Plumbing and other services drawings.
4. Refer doors & windows schedule/elevations for size of doors & windows
5. Provide threshold at all exterior doors as per details, unless otherwise indicated.

Government of Nepal
Ministry of Education
Central Level Project Implementation Unit
Gyaneshwor, Kathmandu

Government Of Nepal
Department Of Education
Sanothimi, Bhaktapur, Nepal

Donor : Japan International Cooperation Agency

Project Title:
Emergency School Reconstruction Project

ORIENTAL CONSULTANTS GLOBAL
Global Consulting for sustainable Development
Joint Venture with
MOHRI, ARCHITECT & ASSOCIATES, INC

Sub-Consultant:
EWES East West Engineering Service Pvt. Ltd.
P. Box-8621,Bansbari, Kathmandu, Nepal. web: ewesnepal.com
Tel: 9771-4373316, Fax:4650203, email- hbgewe@gmail.com

Mr. Tomoki Miyano	Mr. H.B. Gurung
Mr. Hisafumi Michikawa	Mr. A.S. Tamang
Mr. Wong Kuok Hung	Mr. S. Malla

Type Design :
2 STOREY 6 SMALL CLASSROOMS

Sheet Title :
BEAM DETAILS

Sheet No.
2-6C (S)

Date : September, 2016

Print Sheet : A'3' Size

S-10

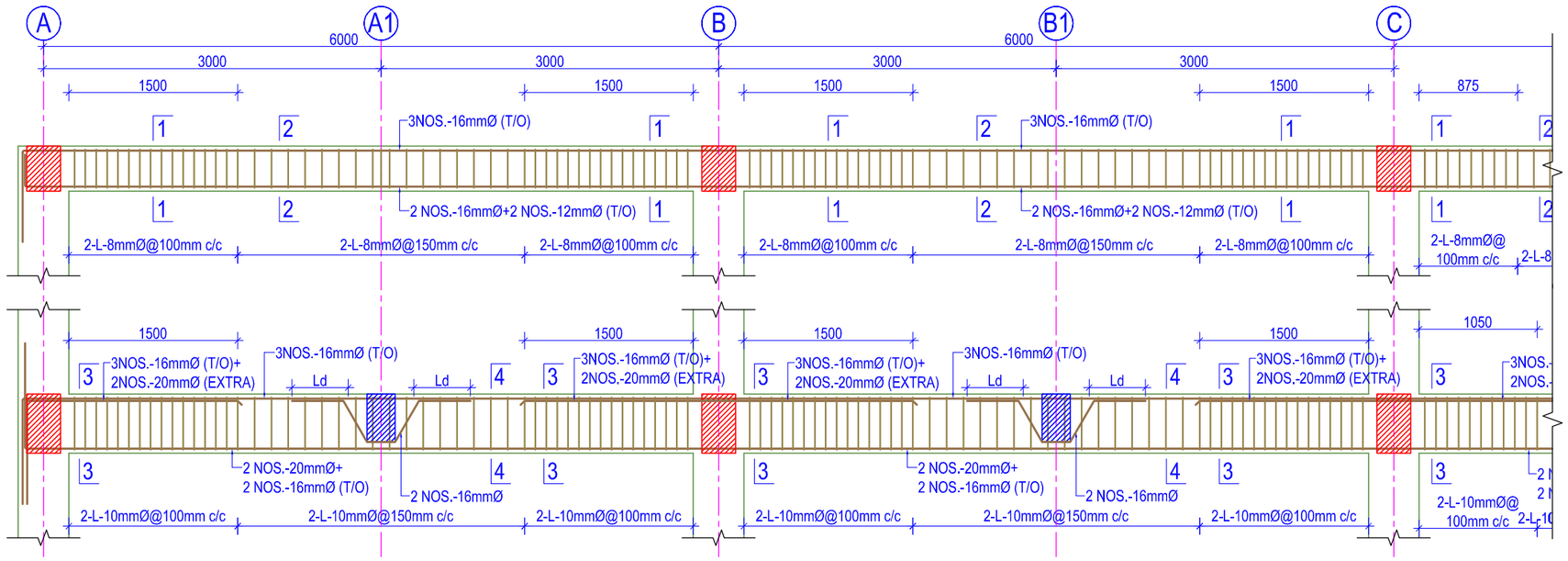

BEAM DETAIL ALONG GRID AT - 2

(SCALE = 1:50)

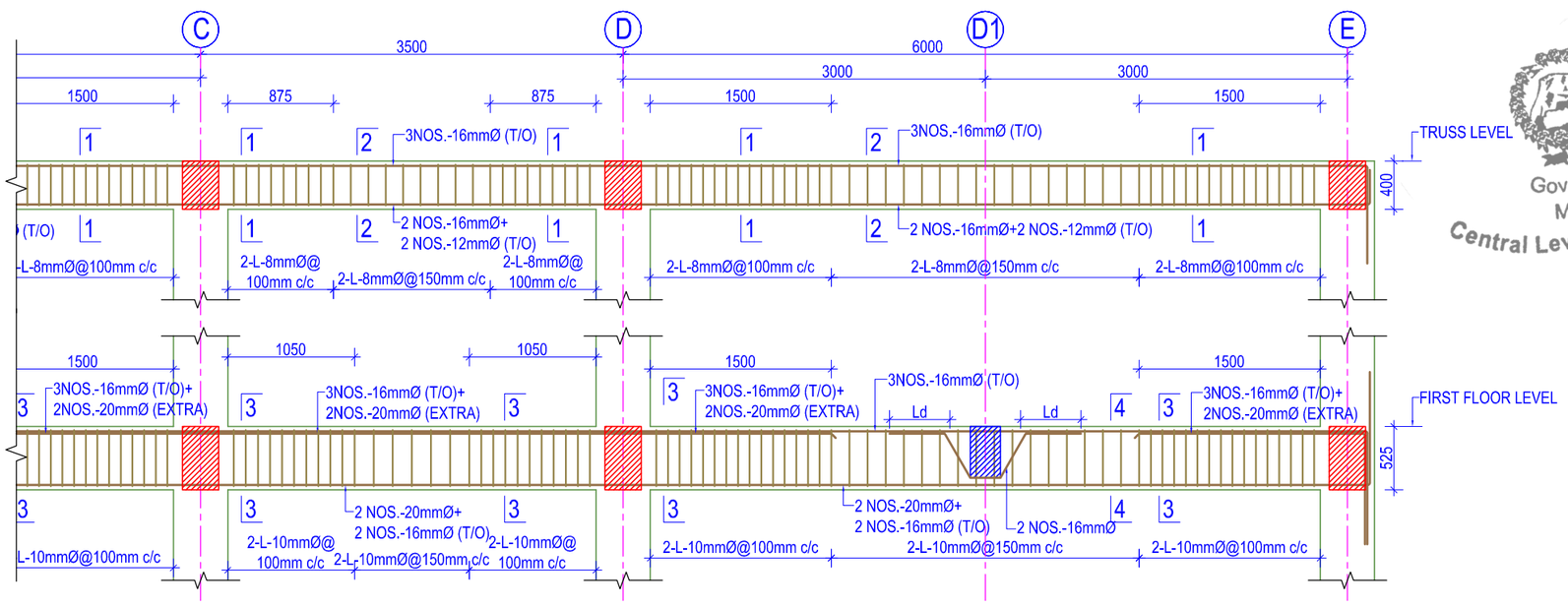

BEAM DETAIL ALONG GRID AT - 2

(SCALE = 1:50)

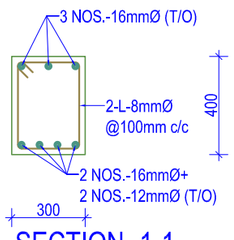

SECTION -1-1

(SCALE = 1:25)

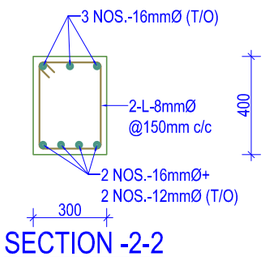

SECTION -2-2

(SCALE = 1:25)

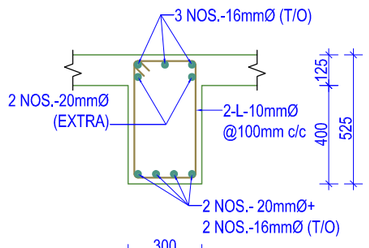

SECTION -3-3

(SCALE = 1:25)

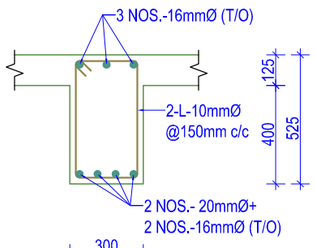

SECTION -4-4

(SCALE = 1:25)

1:25 0 250MM 500MM 750MM 1M 1.25M

1:50 0 500MM 1M 1.5M 2M 2.5M

NOTES:

1. Any discrepancy in the drawing to be immediately reported to the consultant or concerned engineer.
2. Drawing are not to be directly measured.
3. Read this drawing along with other related drawings and coordinate with Structural, Electrical, Plumbing and other services drawings.
4. Refer doors & windows schedule/elevations for size of doors & windows
5. Provide threshold at all exterior doors as per details, unless otherwise indicated.

Government of Nepal
Ministry of Education
Central Level Project Implementation Unit
Gyaneshwor,Kathmandu

Government Of Nepal
Department Of Education
Sanothimi, Bhaktapur, Nepal

Donor : Japan International Cooperation Agency

Project Title:
Emergency School Reconstruction Project

ORIENTAL CONSULTANTS GLOBAL
Global Consulting for sustainable Development
Joint Venture with
MOHRI, ARCHITECT & ASSOCIATES, INC

Sub-Consultant:
EWES East West Engineering Service Pvt. Ltd.
P. Box-8621,Bansbari, Kathmandu, Nepal. web: ewesnepal.com
Tel: 9771-4373316, Fax:4650203, email- hbgewe@gmail.com

Mr. Tomoki Miyano	Mr. H.B. Gurung
Mr. Hisafumi Michikawa	Mr. A.S. Tamang
Mr. Wong Kuok Hung	Mr. S. Malla

Type Design :
2 STOREY 6 SMALL CLASSROOMS

Sheet Title :
BEAM DETAILS

Sheet No.
2-6C (S)

Date : September, 2016

Print Sheet : A'3' Size

S-11

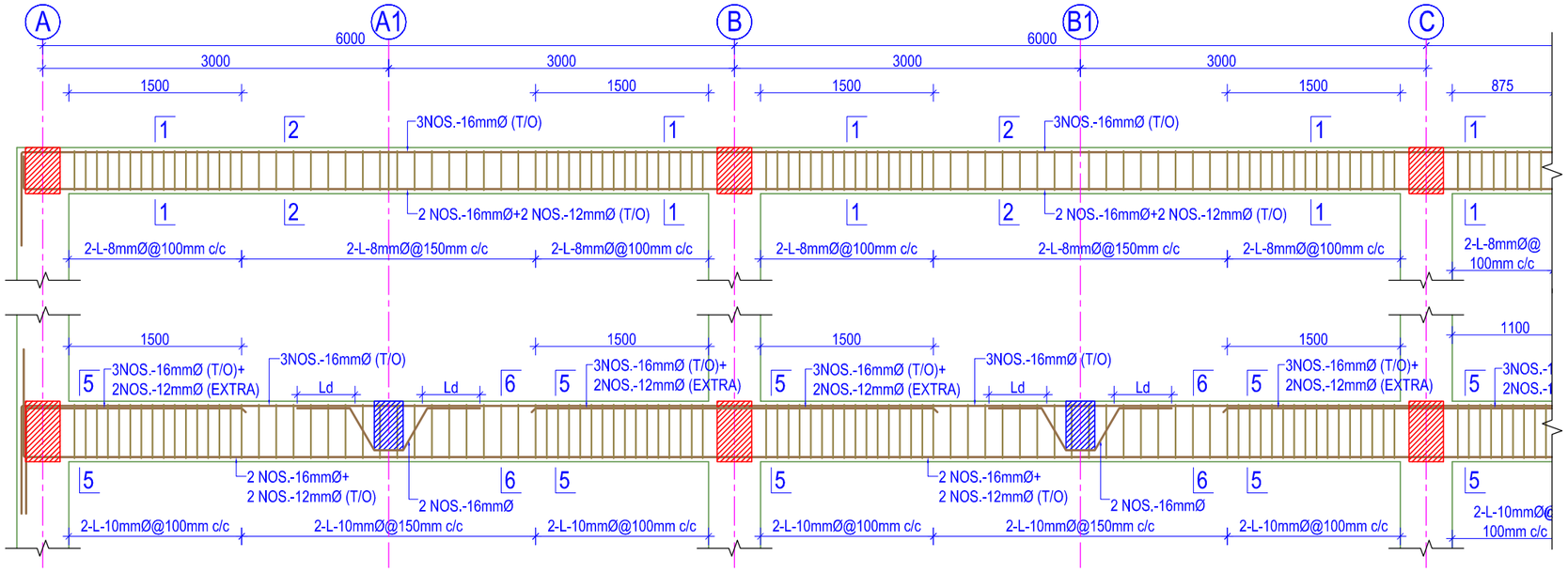

BEAM DETAIL ALONG GRID AT -3

(SCALE = 1:50)

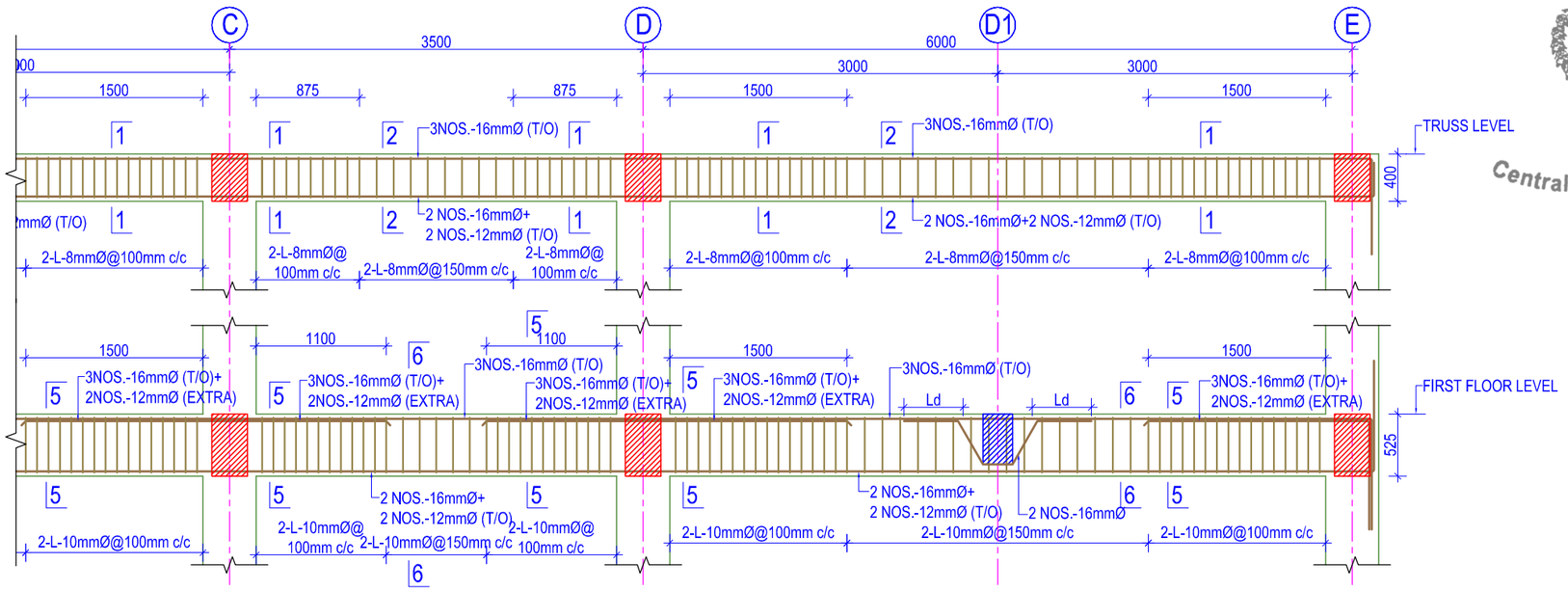

BEAM DETAIL ALONG GRID AT -3

(SCALE = 1:50)

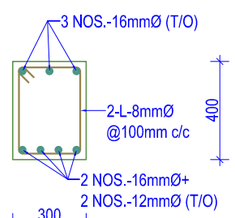

SECTION -1-1

(SCALE = 1:25)

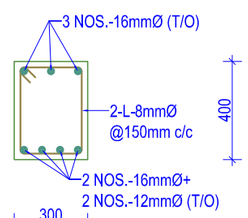

SECTION -2-2

(SCALE = 1:25)

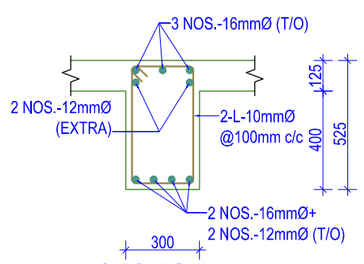

SECTION -5-5

(SCALE = 1:25)

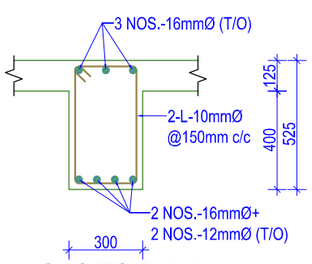

SECTION -6-6

(SCALE = 1:25)

1:25 0 250MM 500MM 750MM 1M 1.25M

1:50 0 500MM 1M 1.5M 2M 2.5M

NOTES:

1. Any discrepancy in the drawing to be immediately reported to the consultant or concerned engineer.
2. Drawing are not to be directly measured.
3. Read this drawing along with other related drawings and coordinate with Structural, Electrical, Plumbing and other services drawings.
4. Refer doors & windows schedule/elevations for size of doors & windows
5. Provide threshold at all exterior doors as per details, unless otherwise indicated.

Government of Nepal
Ministry of Education
Central Level Project Implementation Unit
Gyaneshwor, Kathmandu

Government Of Nepal
Department Of Education
Sanothimi, Bhaktapur, Nepal

Donor : Japan International Cooperation Agency

Project Title:
Emergency School Reconstruction Project

ORIENTAL CONSULTANTS GLOBAL
Global Consulting for sustainable Development
Joint Venture with
MOHRI, ARCHITECT & ASSOCIATES, INC

Sub-Consultant:
EWES East West Engineering Service Pvt. Ltd.
P. Box-8621,Bansbari, Kathmandu, Nepal. web: ewesnepal.com
Tel: 9771-4373316, Fax:4650203, email- hbgewe@gmail.com

Mr. Tomoki Miyano	Mr. H.B. Gurung
Mr. Hisafumi Michikawa	Mr. A.S. Tamang
Mr. Wong Kuok Hung	Mr. S. Malla

Type Design :
2 STOREY 6 SMALL CLASSROOMS

Sheet Title :
BEAM DETAILS

Sheet No.
2-6C (S)

Date : September, 2016

Print Sheet : A'3' Size

S-12

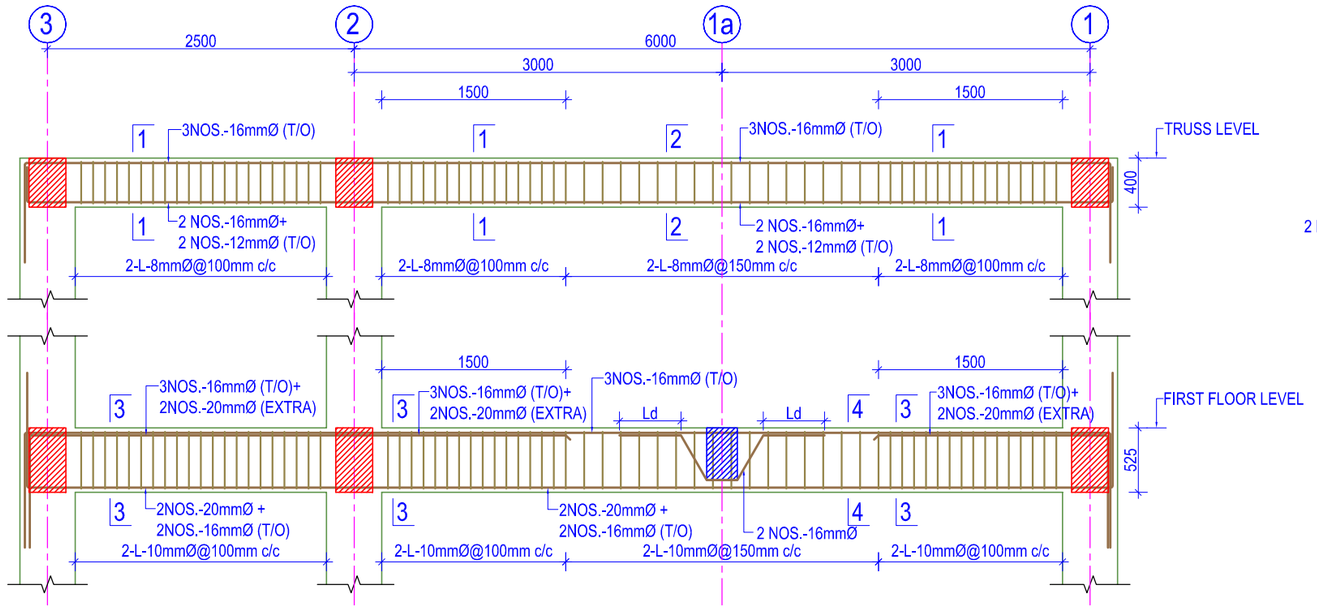

BEAM DETAIL ALONG GRID AT -A, C, D & E

(SCALE = 1:50)

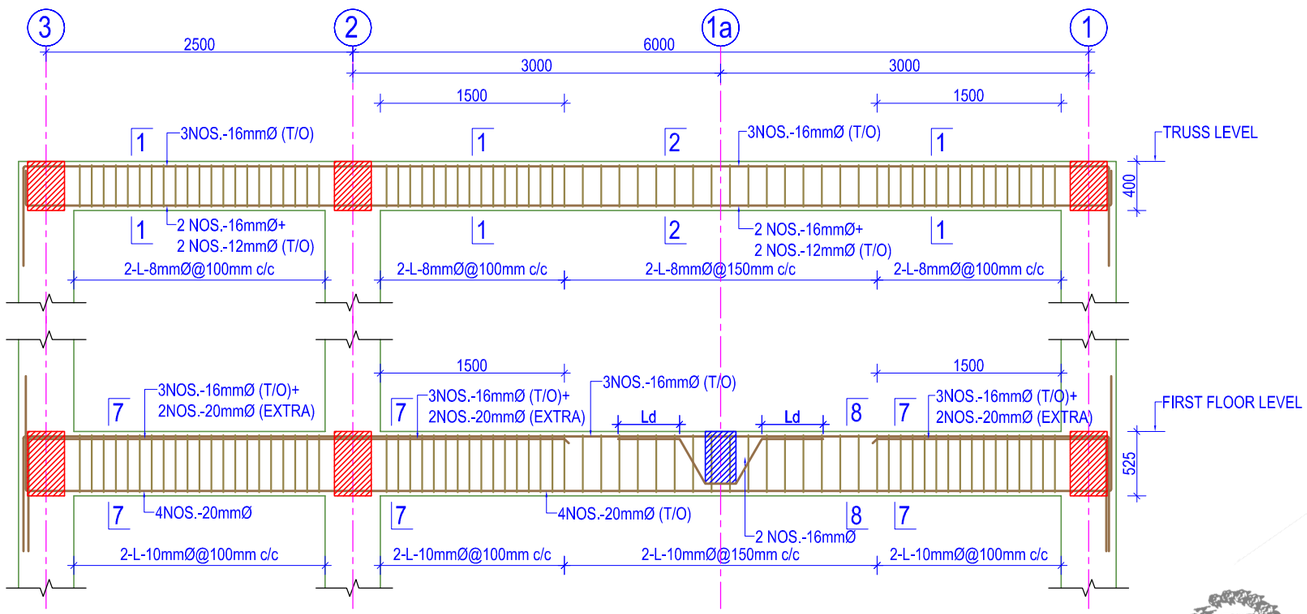

BEAM DETAIL ALONG GRID AT -B

(SCALE = 1:50)

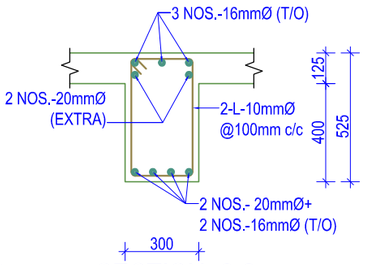

SECTION -3-3

(SCALE = 1:25)

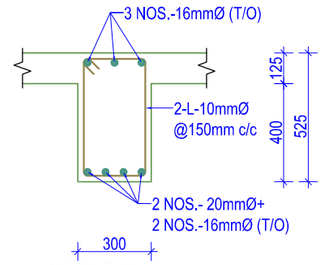

SECTION -4-4

(SCALE = 1:25)

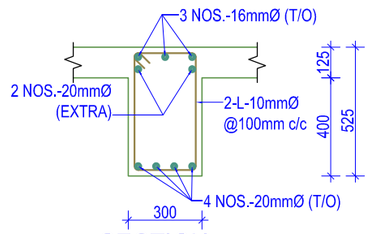

SECTION -7-7

(SCALE = 1:25)

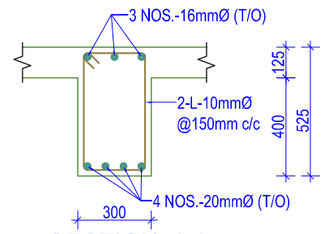

SECTION -8-8

(SCALE = 1:25)

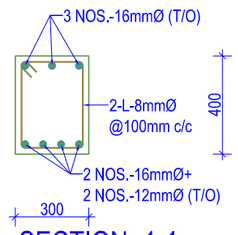

SECTION -1-1

(SCALE = 1:25)

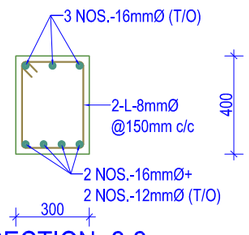

SECTION -2-2

(SCALE = 1:25)

Government of Nepal
Ministry of Education
Central Level Project Implementation Unit
Gyaneshwor,Kathmandu

0 250MM 500MM 750MM 1M 1.25M
1:25

0 500MM 1M 1.5M 2M 2.5M
1:50

NOTES:

1. Any discrepancy in the drawing to be immediately reported to the consultant or concerned engineer.
2. Drawing are not to be directly measured.
3. Read this drawing along with other related drawings and coordinate with Structural, Electrical, Plumbing and other services drawings.
4. Refer doors & windows schedule/elevations for size of doors & windows
5. Provide threshold at all exterior doors as per details, unless otherwise indicated.

Government Of Nepal
Department Of Education
Sanothimi, Bhaktapur, Nepal

Donor :
Japan International Cooperation Agency

Project Title:
Emergency School Reconstruction Project

ORIENTAL CONSULTANTS GLOBAL
Global Consulting for sustainable Development
Joint Venture with
MOHRI, ARCHITECT & ASSOCIATES, INC

Sub-Consultant:
EWES East West Engineering Service Pvt. Ltd.
P. Box-8621,Bansbari, Kathmandu, Nepal. web: ewesnepal.com
Tel: 9771-4373316, Fax:4650203, email- hbgewe@gmail.com

Mr. Tomoki Miyano	Mr. H.B. Gurung
Mr. Hisafumi Michikawa	Mr. A.S. Tamang
Mr. Wong Kuok Hung	Mr. S. Malla

Type Design :
2 STOREY 6 SMALL CLASSROOMS

Sheet Title :
BEAM DETAILS

Sheet No.
2-6C (S)

Date : September, 2016

Print Sheet : A'3' Size

S-13

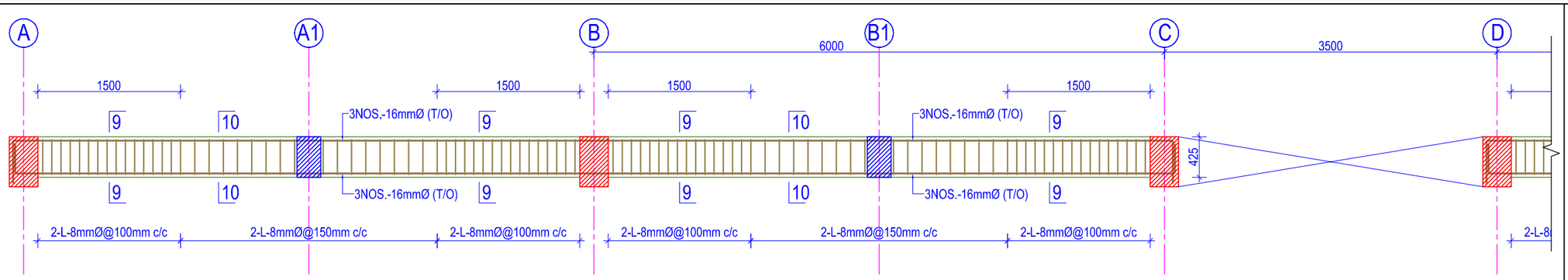

SECONDARY BEAM DETAIL ALONG GRID AT -1a

(SCALE = 1:50)

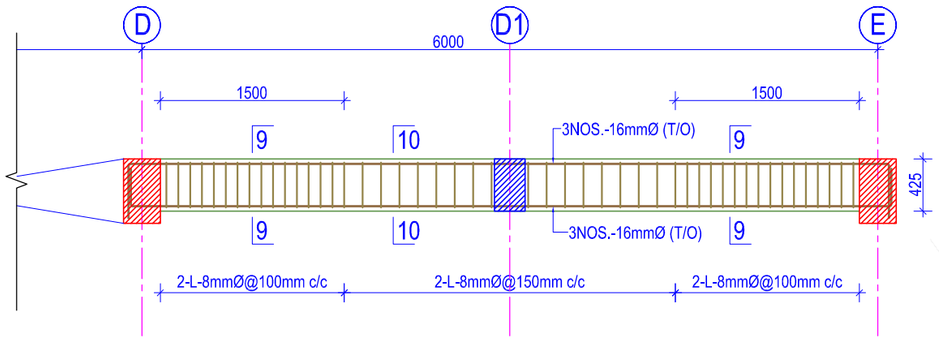

SECONDARY BEAM DETAIL ALONG GRID AT -1a

(SCALE = 1:50)

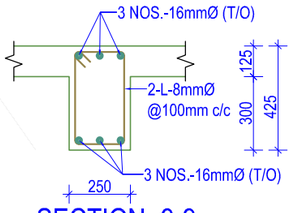

SECTION -9-9

(SCALE = 1:25)

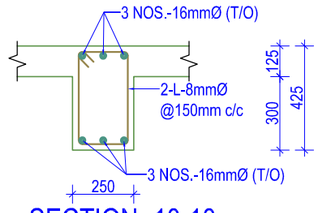

SECTION -10-10

(SCALE = 1:25)

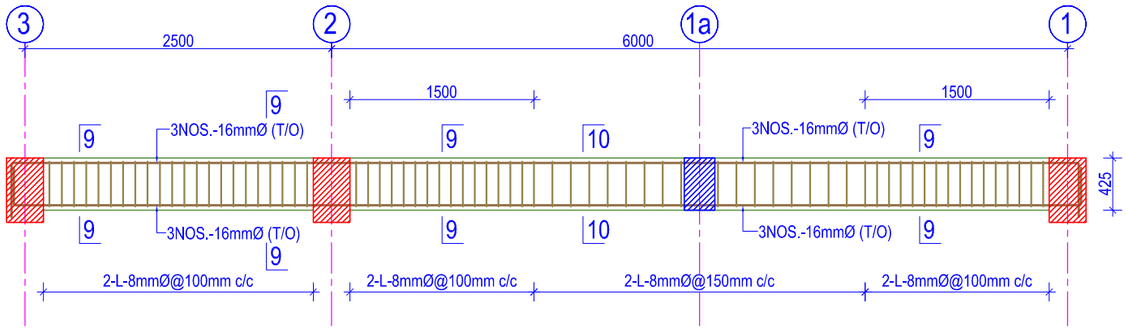

SECONDARY BEAM DETAIL ALONG GRID AT -A1, B1 & D1

(SCALE = 1:50)

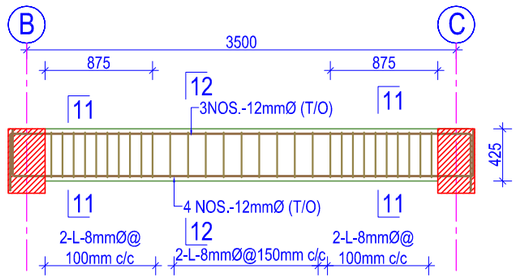

SECONDARY BEAM DETAIL ALONG GRID AT -1b

(SCALE = 1:50)

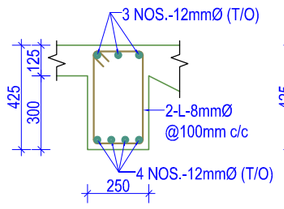

SECTION -11-11

(Scale= 1:25)

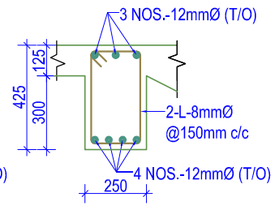

SECTION -12-12

(Scale= 1:25)

Government of Nepal
Ministry of Education
Central Level Project Implementation Unit
Gyaneshwor,Kathmandu

1:25 — 0, 250MM, 500MM, 750MM, 1M, 1.25M

1:50 — 0, 500MM, 1M, 1.5M, 2M, 2.5M

NOTES:

1. Any discrepancy in the drawing to be immediately reported to the consultant or concerned engineer.
2. Drawing are not to be directly measured.
3. Read this drawing along with other related drawings and coordinate with Structural, Electrical, Plumbing and other services drawings.
4. Refer doors & windows schedule/elevations for size of doors & windows
5. Provide threshold at all exterior doors as per details, unless otherwise indicated.

Government Of Nepal
Department Of Education
Sanothimi, Bhaktapur, Nepal

Donor :
Japan International Cooperation Agency

Project Title:
Emergency School Reconstruction Project

ORIENTAL CONSULTANTS GLOBAL
Global Consulting for sustainable Development
Joint Venture with
MOHRI, ARCHITECT & ASSOCIATES, INC

Sub-Consultant:
East West Engineering Service Pvt. Ltd.
P. Box-8621,Bansbari, Kathmandu, Nepal. web: ewesnepal.com
Tel: 9771-4373316, Fax:4650203, email- hbgewe@gmail.com

Mr. Tomoki Miyano	Mr. H.B. Gurung
Mr. Hisafumi Michikawa	Mr. A.S. Tamang
Mr. Wong Kuok Hung	Mr. S. Malla

Type Design :
2 STOREY 6 SMALL CLASSROOMS

Sheet Title :
BEAM DETAILS

Sheet No.
2-6C (S)

Date : September, 2016

Print Sheet : A'3' Size

S-14

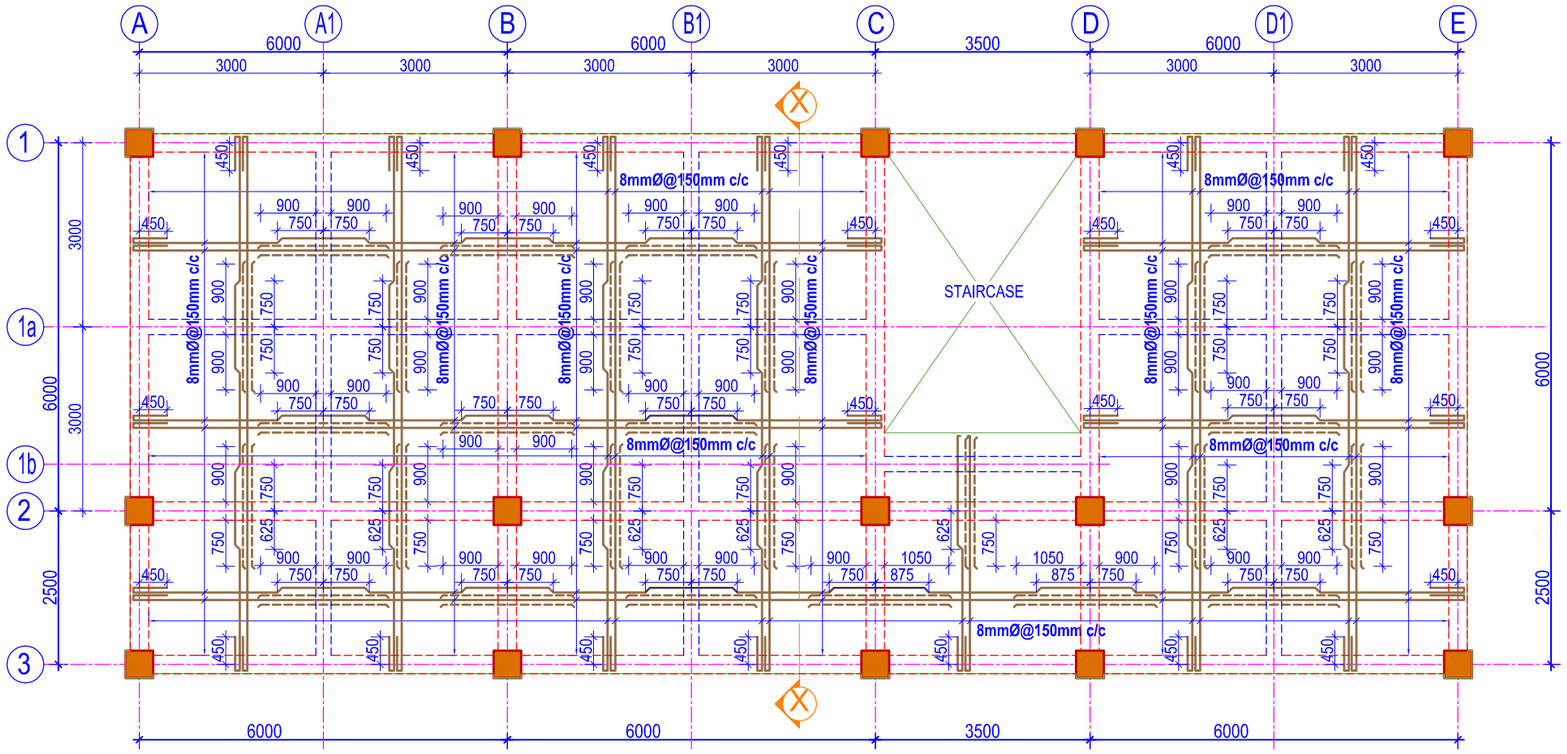

SLAB REINFORCEMENT PLAN AT FIRST FLOOR LEVEL

(Scale= 1:100)

SLAB THICKNESS	125mm
MAIN BAR (SHORT SPAN)	8mmØ@150mm c/c
MAIN BAR (LONG SPAN)	8mmØ@150mm c/c
NEGATIVE BAR (TOP BAR)	8mmØ@300mm c/c
DISTRIBUTION BAR	8mmØ@150mm c/c

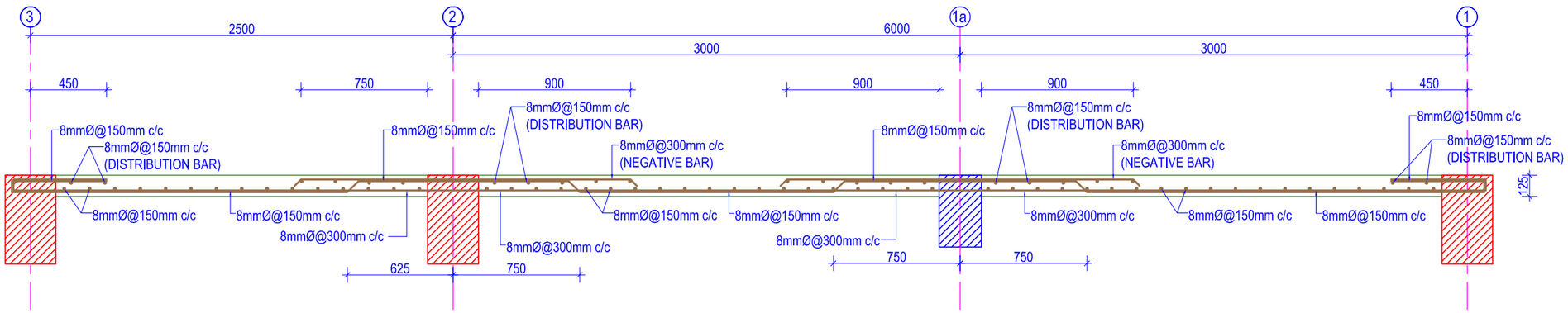

SLAB SECTION -X-X

(SCALE = 1:30)

1:30 — 0, 300MM, 600MM, 900MM, 1.2M, 1.5M

1:100 — 0, 1M, 2M, 3M, 4M, 5M

NOTES:

1. Any discrepancy in the drawing to be immediately reported to the consultant or concerned engineer.
2. Drawing are not to be directly measured.
3. Read this drawing along with other related drawings and coordinate with Structural, Electrical, Plumbing and other services drawings.
4. Refer doors & windows schedule/elevations for size of doors & windows
5. Provide threshold at all exterior doors as per details, unless otherwise indicated.

Government of Nepal
Ministry of Education
Central Level Project Implementation Unit
Gyaneshwor, Kathmandu

Government Of Nepal
Department Of Education
Sanothimi, Bhaktapur, Nepal

Donor : Japan International Cooperation Agency

Project Title:
Emergency School Reconstruction Project

ORIENTAL CONSULTANTS GLOBAL
Global Consulting for sustainable Development
Joint Venture with
MOHRI, ARCHITECT & ASSOCIATES, INC

Sub-Consultant:
EWES East West Engineering Service Pvt. Ltd.
P. Box-8621,Bansbari, Kathmandu, Nepal. web: ewesnepal.com
Tel: 9771-4373316, Fax:4650203, email- hbgewe@gmail.com

Mr. Tomoki Miyano	Mr. H.B. Gurung
Mr. Hisafumi Michikawa	Mr. A.S. Tamang
Mr. Wong Kuok Hung	Mr. S. Malla

Type Design :
2 STOREY 6 SMALL CLASSROOMS

Sheet Title :
SLAB PLAN & SECTION
(FIRST FLOOR LEVEL)

Sheet No. 2-6C (S)

Date : September, 2016

Print Sheet : A'3' Size

S-15

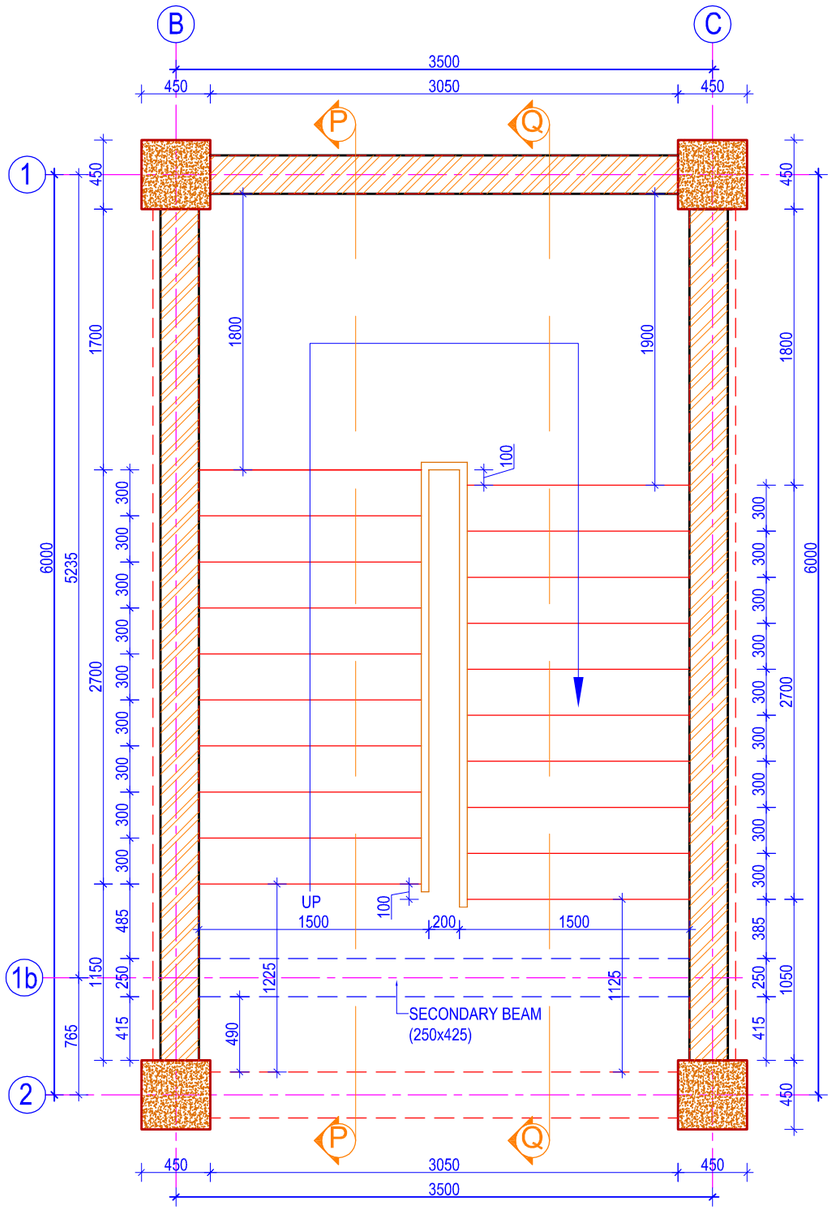

STAIRCASE DETAIL PLAN

(SCALE = 1:40)

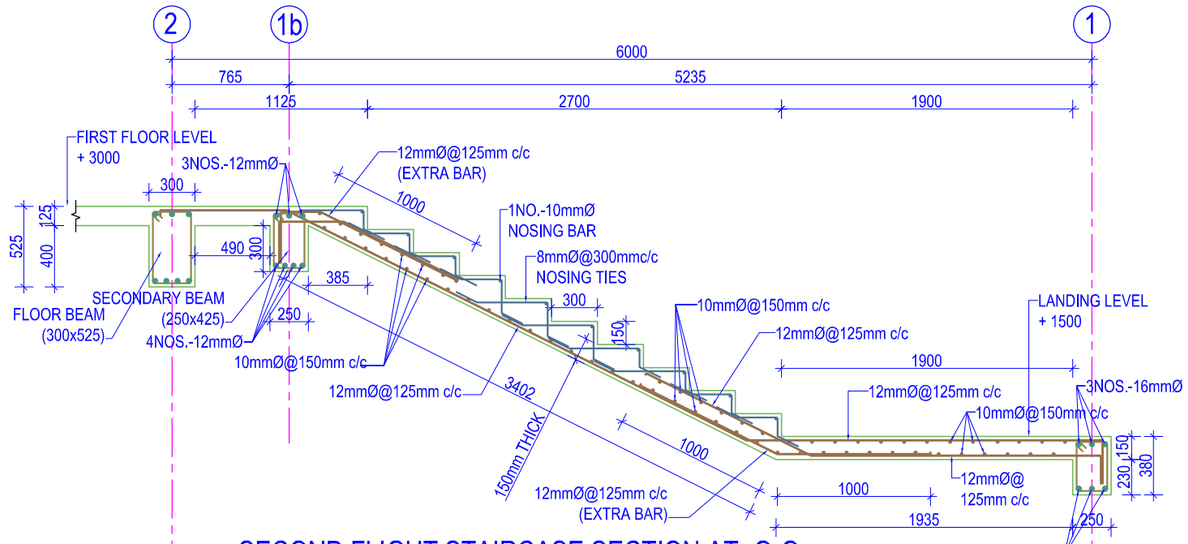

SECOND FLIGHT STAIRCASE SECTION AT -Q-Q

(SCALE = 1:40)

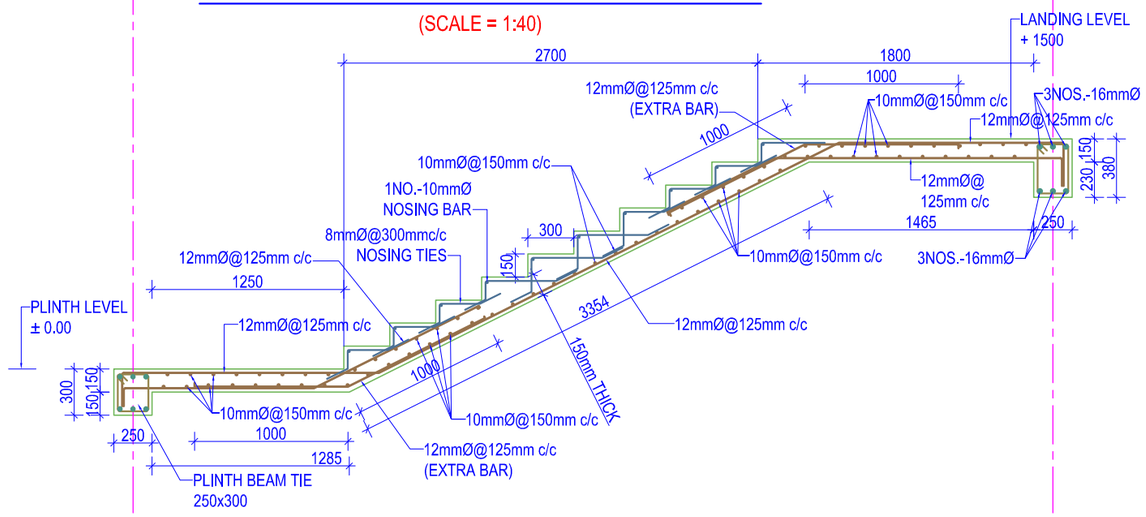

FIRST FLIGHT STAIRCASE SECTION AT -P-P

(SCALE = 1:40)

Government of Nepal
Ministry of Education
Central Level Project Implementation Unit
Gyaneshwor,Kathmandu

1:40 0 400MM 800MM 1.2M 1.6M 2M

NOTES:

1. Any discrepancy in the drawing to be immediately reported to the consultant or concerned engineer.
2. Drawing are not to be directly measured.
3. Read this drawing along with other related drawings and coordinate with Structural, Electrical, Plumbing and other services drawings.
4. Refer doors & windows schedule/elevations for size of doors & windows
5. Provide threshold at all exterior doors as per details, unless otherwise indicated.

Government Of Nepal
Department Of Education
Sanothimi, Bhaktapur, Nepal

Donor :
Japan International Cooperation Agency

Project Title:
Emergency School Reconstruction Project

ORIENTAL CONSULTANTS GLOBAL
Global Consulting for sustainable Development
Joint Venture with
MOHRI, ARCHITECT & ASSOCIATES, INC

Sub-Consultant:
EWES East West Engineering Service Pvt. Ltd.
P. Box-8621,Bansbari, Kathmandu, Nepal. web: ewesnepal.com
Tel: 9771-4373316, Fax:4650203, email- hbgewe@gmail.com

Mr. Tomoki Miyano	Mr. H.B. Gurung
Mr. Hisafumi Michikawa	Mr. A.S. Tamang
Mr. Wong Kuok Hung	Mr. S. Malla

Type Design :
2 STOREY 6 SMALL CLASSROOMS

Sheet Title :
STAIRCASE PLAN & SECTION

Sheet No.
2-6C (S)

Date : September, 2016

Print Sheet : A'3' Size

S-16

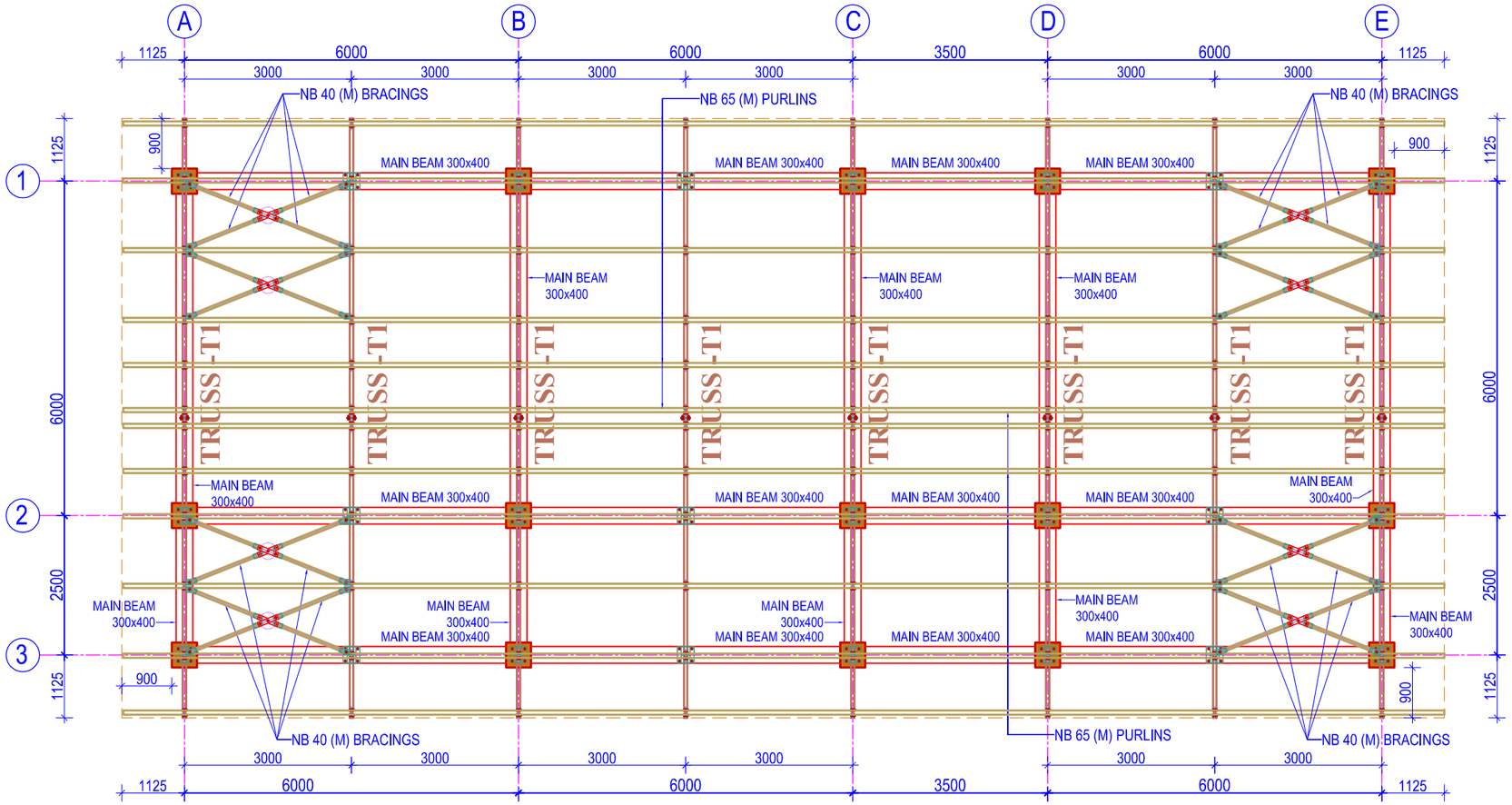

TRUSS PLAN

(Scale= 1:100)

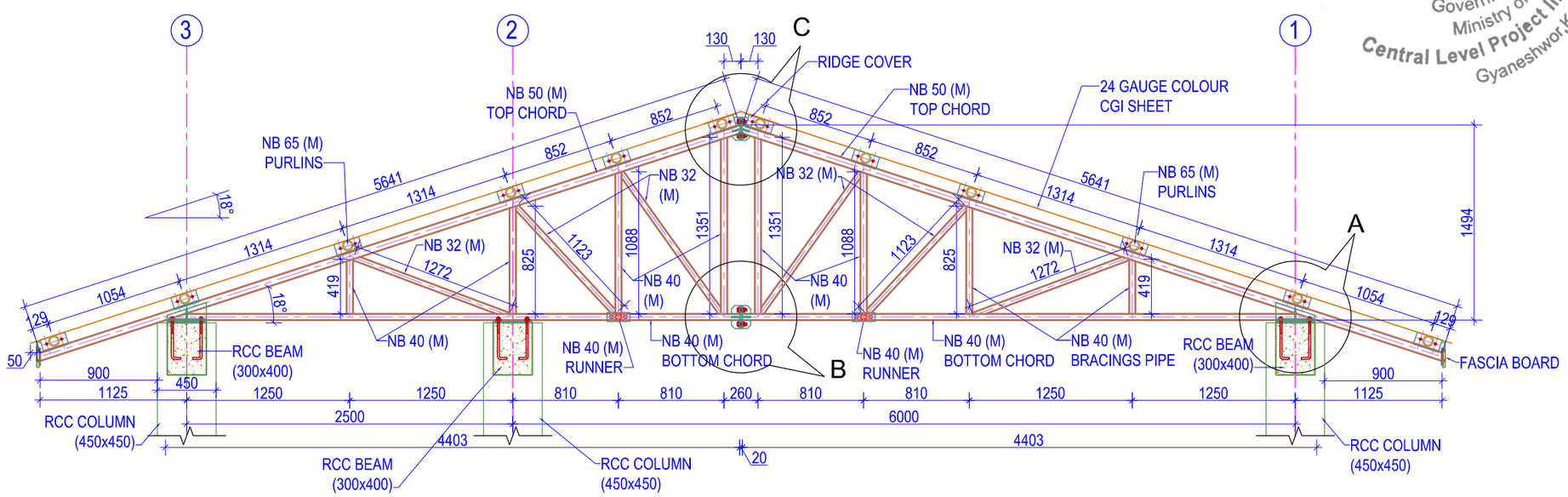

TRUSS -T1

(Scale= 1:40)

0 400MM 800MM 1.2M 1.6M 2M
1:40

0 1M 2M 3M 4M 5M
1:100

Government of Nepal
Ministry of Education
Central Level Project Implementation Unit
Gyaneshwor,Kathmandu

NOTES:

1. Any discrepancy in the drawing to be immediately reported to the consultant or concerned engineer.
2. Drawing are not to be directly measured.
3. Read this drawing along with other related drawings and coordinate with Structural, Electrical, Plumbing and other services drawings.
4. Refer doors & windows schedule/elevations for size of doors & windows
5. Provide threshold at all exterior doors as per details, unless otherwise indicated.

Government Of Nepal
Department Of Education
Sanothimi, Bhaktapur, Nepal

Donor :
Japan International Cooperation Agency

Project Title:
Emergency School Reconstruction Project

ORIENTAL CONSULTANTS GLOBAL
Global Consulting for sustainable Development
Joint Venture with
MOHRI, ARCHITECT & ASSOCIATES, INC

Sub-Consultant:
East West Engineering Service Pvt. Ltd.
P. Box-8621,Bansbari, Kathmandu, Nepal. web: ewesnepal.com
Tel: 9771-4373316, Fax:4650203, email- hbgewe@gmail.com

Mr. Tomoki Miyano	Mr. H.B. Gurung
Mr. Hisafumi Michikawa	Mr. A.S. Tamang
Mr. Wong Kuok Hung	Mr. S. Malla

Type Design :
2 STOREY 6 SMALL CLASSROOMS

Sheet Title :
TRUSS PLAN & SECTION

Sheet No.
2-6C (S)

Date : September, 2016

Print Sheet : A'3' Size

S-17

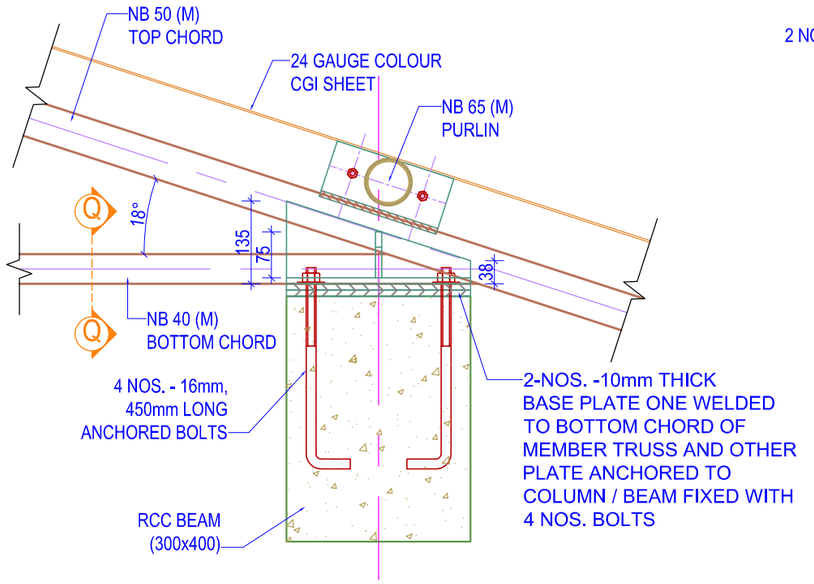

DETAIL AT -A

(Scale= 1:10)

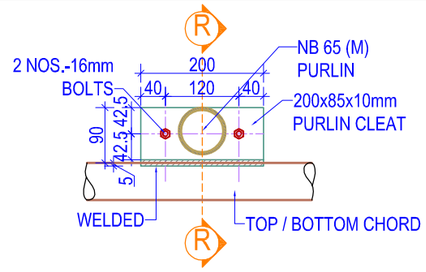

PURLIN CLEAT DETAIL

(Scale= 1:10)

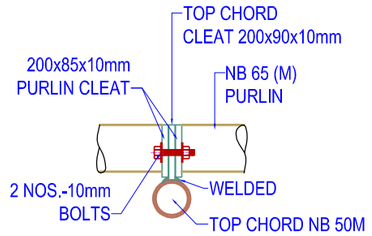

PURLIN CLEAT DETAIL SECTION -R-R

(Scale= 1:10)

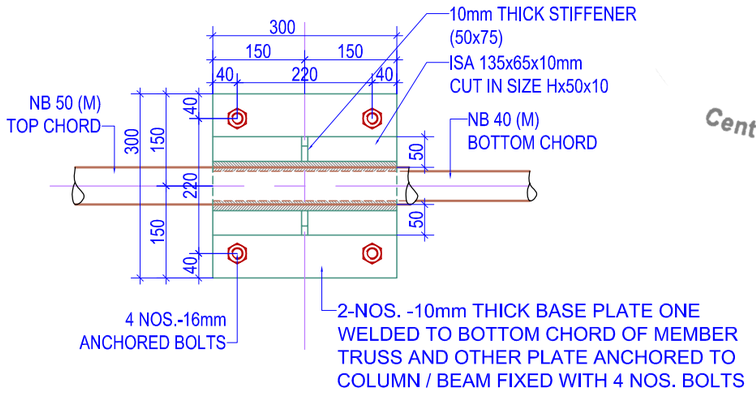

BASE PLATE PLAN AT -A

(Scale= 1:10)

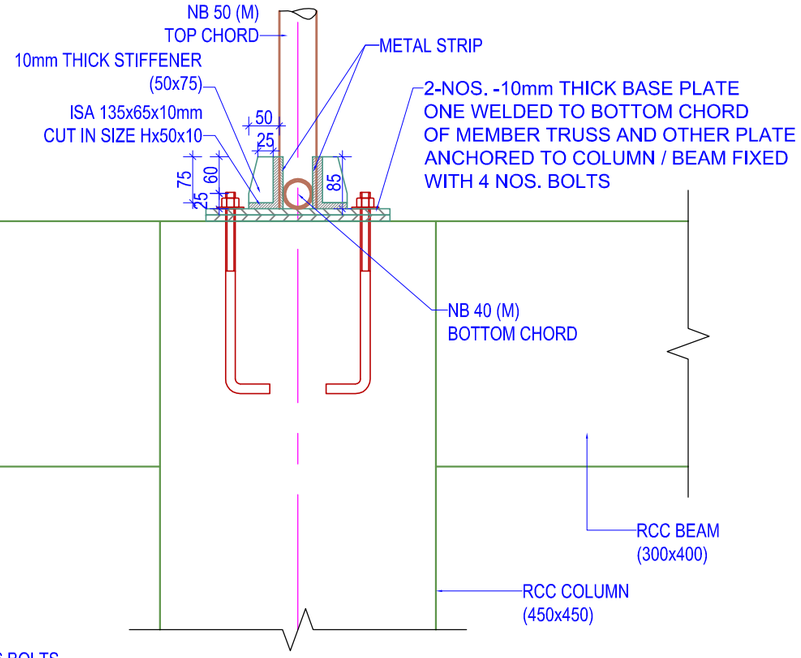

SECTION AT -Q-Q

(Scale= 1:10)

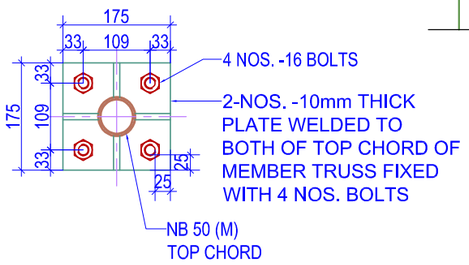

PLATE DETAIL AT -Y-Y

(Scale= 1:10)

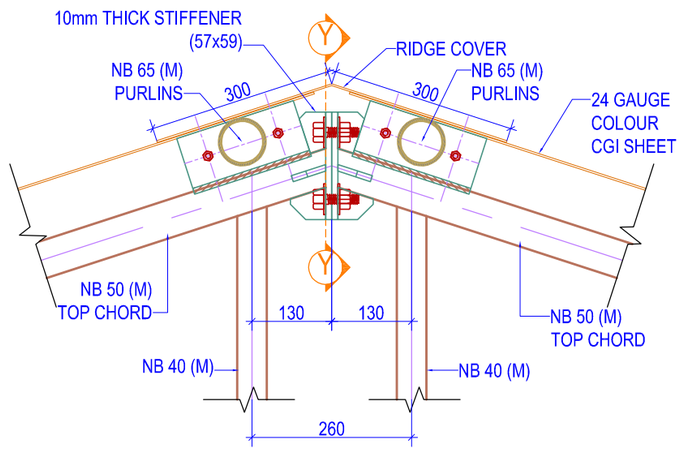

DETAIL AT -C

(Scale= 1:10)

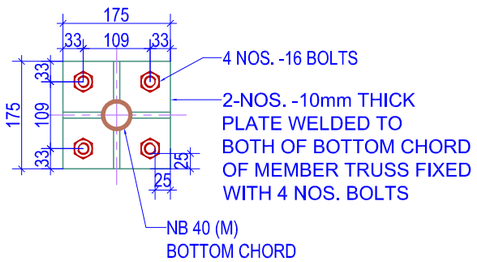

PLATE DETAIL AT -X-X

(Scale= 1:10)

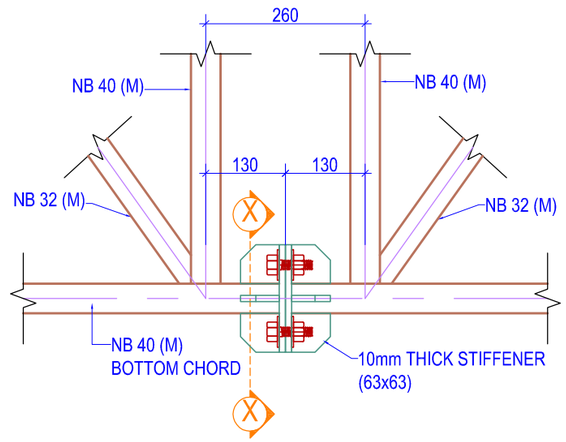

DETAIL AT -B

(Scale= 1:10)

1:10 0 100MM 200MM 300MM 400MM 500MM

Government of Nepal
Ministry of Education
Central Level Project Implementation Unit
Gyaneshwor, Kathmandu

NOTES:

1. Any discrepancy in the drawing to be immediately reported to the consultant or concerned engineer.
2. Drawing are not to be directly measured.
3. Read this drawing along with other related drawings and coordinate with Structural, Electrical, Plumbing and other services drawings.
4. Refer doors & windows schedule/elevations for size of doors & windows
5. Provide threshold at all exterior doors as per details, unless otherwise indicated.

Government Of Nepal
Department Of Education
Sanothimi, Bhaktapur, Nepal

Donor : Japan International Cooperation Agency

Project Title:
Emergency School Reconstruction Project

ORIENTAL CONSULTANTS GLOBAL
Global Consulting for sustainable Development
Joint Venture with
MOHRI, ARCHITECT & ASSOCIATES, INC

Sub-Consultant:
EWES East West Engineering Service Pvt. Ltd.
P. Box-8621,Bansbari, Kathmandu, Nepal. web: ewesnepal.com
Tel: 9771-4373316, Fax:4650203, email- hbgewe@gmail.com

Mr. Tomoki Miyano	Mr. H.B. Gurung
Mr. Hisafumi Michikawa	Mr. A.S. Tamang
Mr. Wong Kuok Hung	Mr. S. Malla

Type Design :
2 STOREY 6 SMALL CLASSROOMS

Sheet Title :	Sheet No.
TRUSS DETAILS	2-6C (S)
Date : September, 2016	S-18
Print Sheet : A'3' Size	

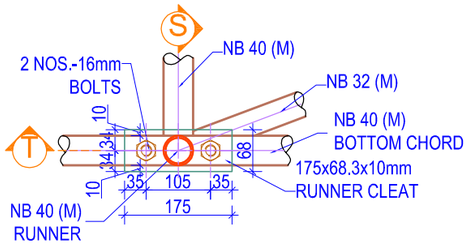

RUNNER PLATE & CONNECTION BOX DETAIL

(Scale= 1:10)

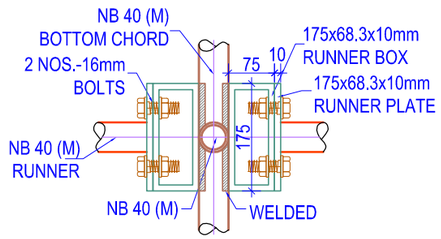

RUNNER PLATE & CONNECTION BOX DETAIL PLAN -T-T

(Scale= 1:10)

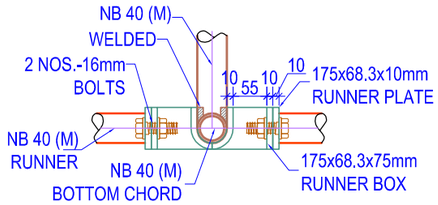

RUNNER PLATE & CONNECTION BOX DETAIL SECTION -S-S AT MID

(Scale= 1:10)

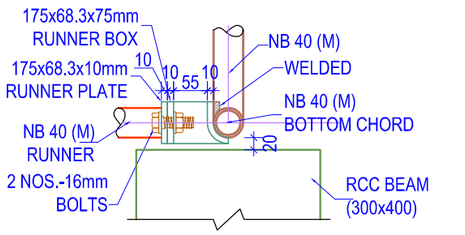

RUNNER PLATE & CONNECTION BOX DETAIL SECTION -S-S AT END

(Scale= 1:10)

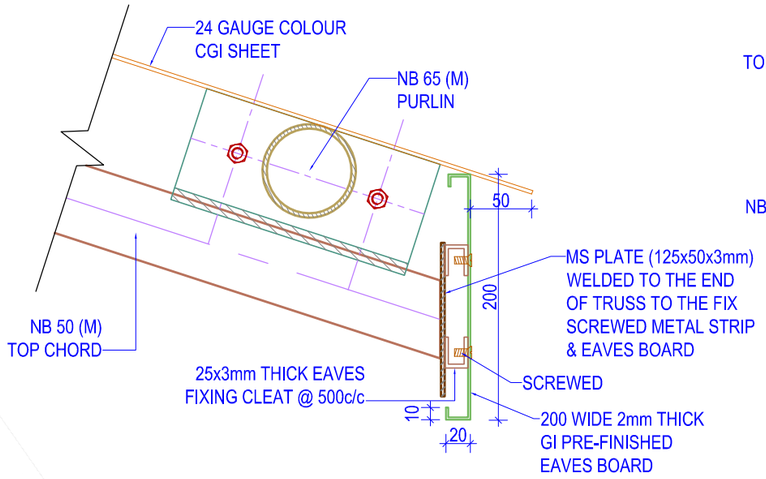

FASCIA BOARD DETAIL

(Scale= 1:5)

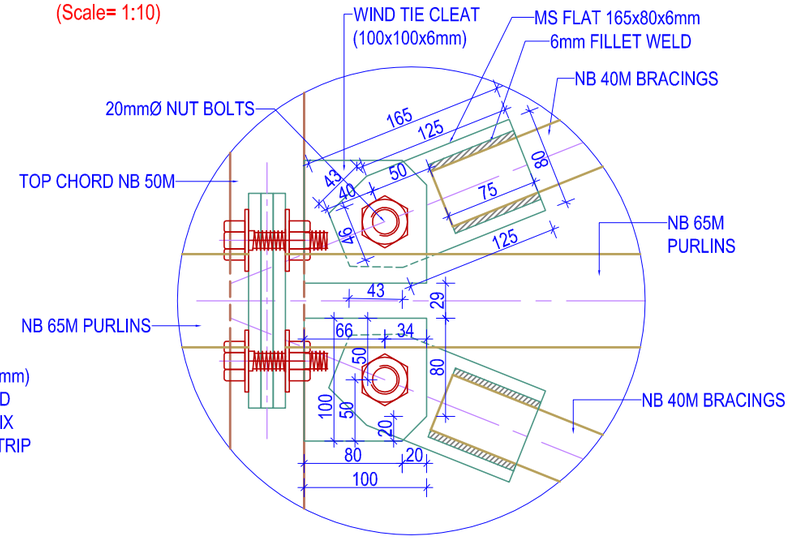

TRUSS CLEAT FOR WIND TIES DETAILS

(Scale= 1:5)

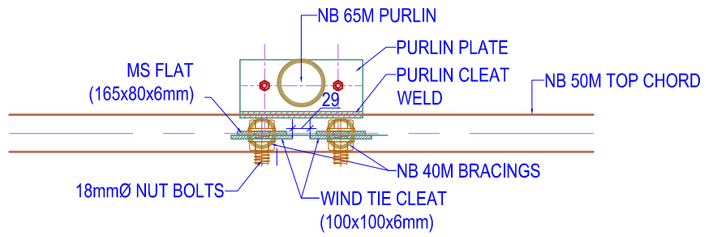

TRUSS CLEAT FOR WIND TIES SECTION DETAILS

(Scale= 1:10)

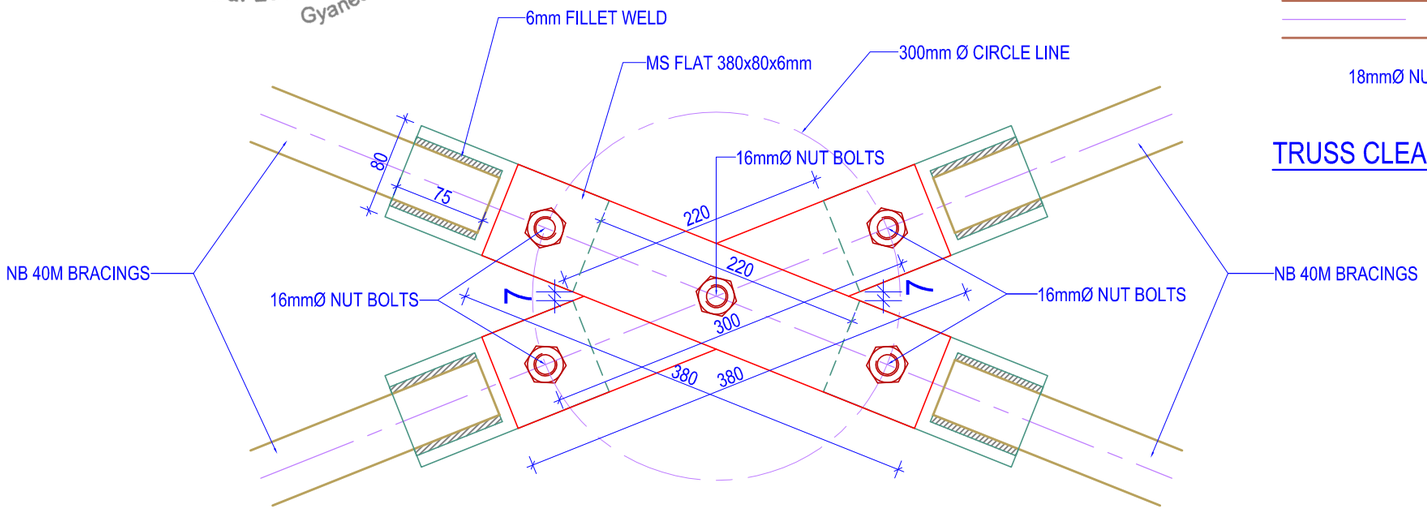

TRUSS CLEAT JUNCTION FOR WIND TIES DETAILS

(Scale= 1:5)

1:5 — 0, 50MM, 100MM, 150MM, 200MM, 250MM

1:10 — 0, 100MM, 200MM, 300MM, 400MM, 500MM

Government of Nepal
Ministry of Education
Central Level Project Implementation Unit
Gyaneshwor, Kathmandu

NOTES:

1. Any discrepancy in the drawing to be immediately reported to the consultant or concerned engineer.
2. Drawing are not to be directly measured.
3. Read this drawing along with other related drawings and coordinate with Structural, Electrical, Plumbing and other services drawings.
4. Refer doors & windows schedule/elevations for size of doors & windows
5. Provide threshold at all exterior doors as per details, unless otherwise indicated.

Government Of Nepal
Department Of Education
Sanothimi, Bhaktapur, Nepal

Donor : Japan International Cooperation Agency

Project Title:
Emergency School Reconstruction Project

ORIENTAL CONSULTANTS GLOBAL
Global Consulting for sustainable Development
Joint Venture with
MOHRI, ARCHITECT & ASSOCIATES, INC

Sub-Consultant:
EWES East West Engineering Service Pvt. Ltd.
P. Box-8621,Bansbari, Kathmandu, Nepal. web: ewesnepal.com
Tel: 9771-4373316, Fax:4650203, email- hbgewe@gmail.com

Mr. Tomoki Miyano	Mr. H.B. Gurung
Mr. Hisafumi Michikawa	Mr. A.S. Tamang
Mr. Wong Kuok Hung	Mr. S. Malla

Type Design :
2 STOREY 6 SMALL CLASSROOMS

Sheet Title : TRUSS DETAILS

Sheet No. 2-6C (S)

Date : September, 2016

Print Sheet : A'3' Size

S-19

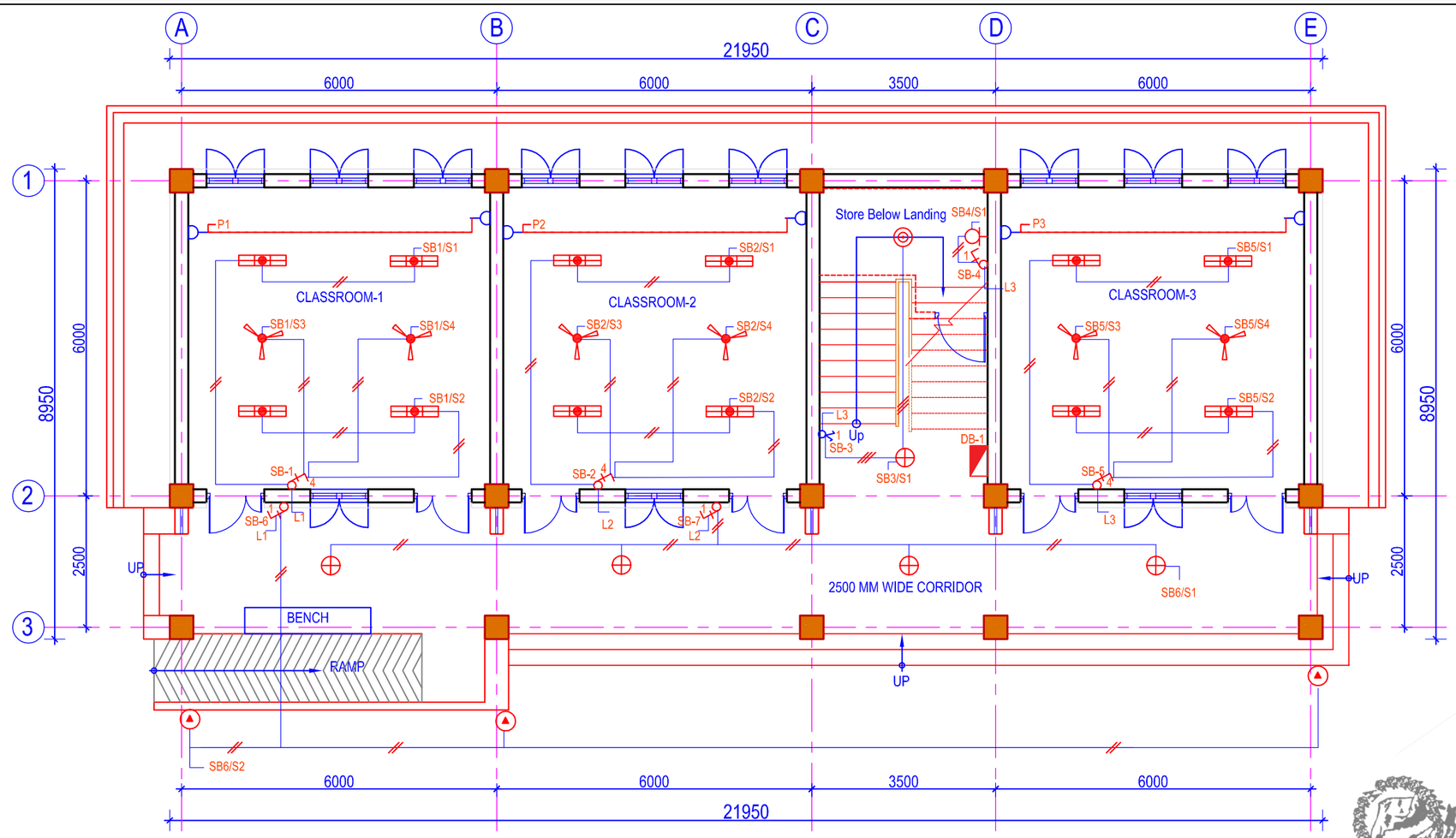

LIGHT,POWER & DB LAYOUT PLAN

(GROUND FLOOR)

(Scale= 1:100)

NOTES:

1. Any discrepancy in the drawing to be immediately reported to the consultant or concerned engineer.
2. Drawing are not to be directly measured.
3. Read this drawing along with other related drawings and coordinate with Structural, Electrical, Plumbing and other services drawings.
4. Refer doors & windows schedule/elevations for size of doors & windows
5. Provide threshold at all exterior doors as per details, unless otherwise indicated.
6. The location of ramps to be adjusted as per site condition.

Government of Nepal
Ministry of Education
Central Level Project Implementation Unit
Gyaneshwor,Kathmandu

LEGEND

SN	SYMBOL	INDICATES	MOUNTING HEIGHT	REMARKS
1		2x28W Recess Type Mirror Optic	Attached to Ceiling	
2		1x28W Recess Type Mirror Optic	Attached to Ceiling	
3		2x28W Surface Type Mirror Optic	Attached to Ceiling	
4		1x28W Surface Type Mirror Optic	Attached to Ceiling	
5		13W CFL Dome Light	Attached to Ceiling	
6		13W CFL Recess Light	Attached to Ceiling	
7		13W LED Post Light	4 Meter Steel Pole	
8		8W CFL Wall Light		
9		1200mm Ceiling Fan	Attached to Ceiling	

SN	SYMBOL	INDICATES	MOUNTING HEIGHT	REMARKS
10		6A Power Socket	Above Skirting	
11		Two way Switch	1.25m above Finished Floor Level	
12	1,2,3,...	One way Switch	1.25m above Finished Floor Level	
13		Single Pole MCB	-	
14		Double Pole MCB	-	
15		Three Pole MCB	-	
16		NEA Meter	2.5 m above Ground Level	
17		Distribution Board	2.5 m above Ground Level	
18		Main Panel Board	2.5 m above Ground Level	

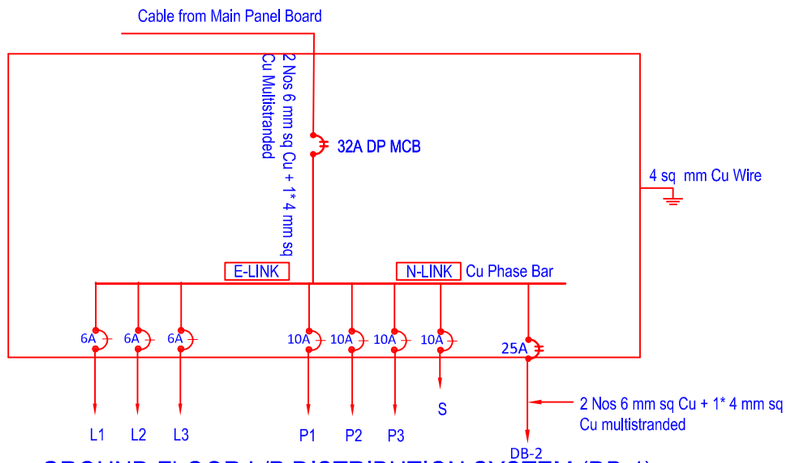

GROUND FLOOR L/P DISTRIBUTION SYSTEM (DB-1)

0 1M 2M 3M 4M 5M
1:100

Government Of Nepal
Department Of Education
Sanothimi, Bhaktapur, Nepal

Donor :
Japan International Cooperation Agency

Project Title:
Emergency School Reconstruction Project

ORIENTAL CONSULTANTS GLOBAL
Global Consulting for sustainable Development
Joint Venture with
MOHRI, ARCHITECT & ASSOCIATES, INC

Sub-Consultant:
EWES East West Engineering Service Pvt. Ltd.
P. Box-8621,Bansbari, Kathmandu, Nepal. web: ewesnepal.com
Tel: 9771-4373316, Fax:4650203, email- hbgewe@gmail.com

Mr. Tomoki Miyano	Mr. H.B. Gurung
Mr. Hisafumi Michikawa	Mr. A.S. Tamang
Mr. Wong Kuok Hung	Mr. A.K. Dhungana

Type Design :
2 STOREY 6 SMALL CLASSROOMS

Sheet Title :
LIGHT, POWER & DB LAYOUT PLAN (GROUND FLOOR)

Sheet No.
2-6C (S)

Date : September, 2016

Print Sheet : A'3' Size

E-01

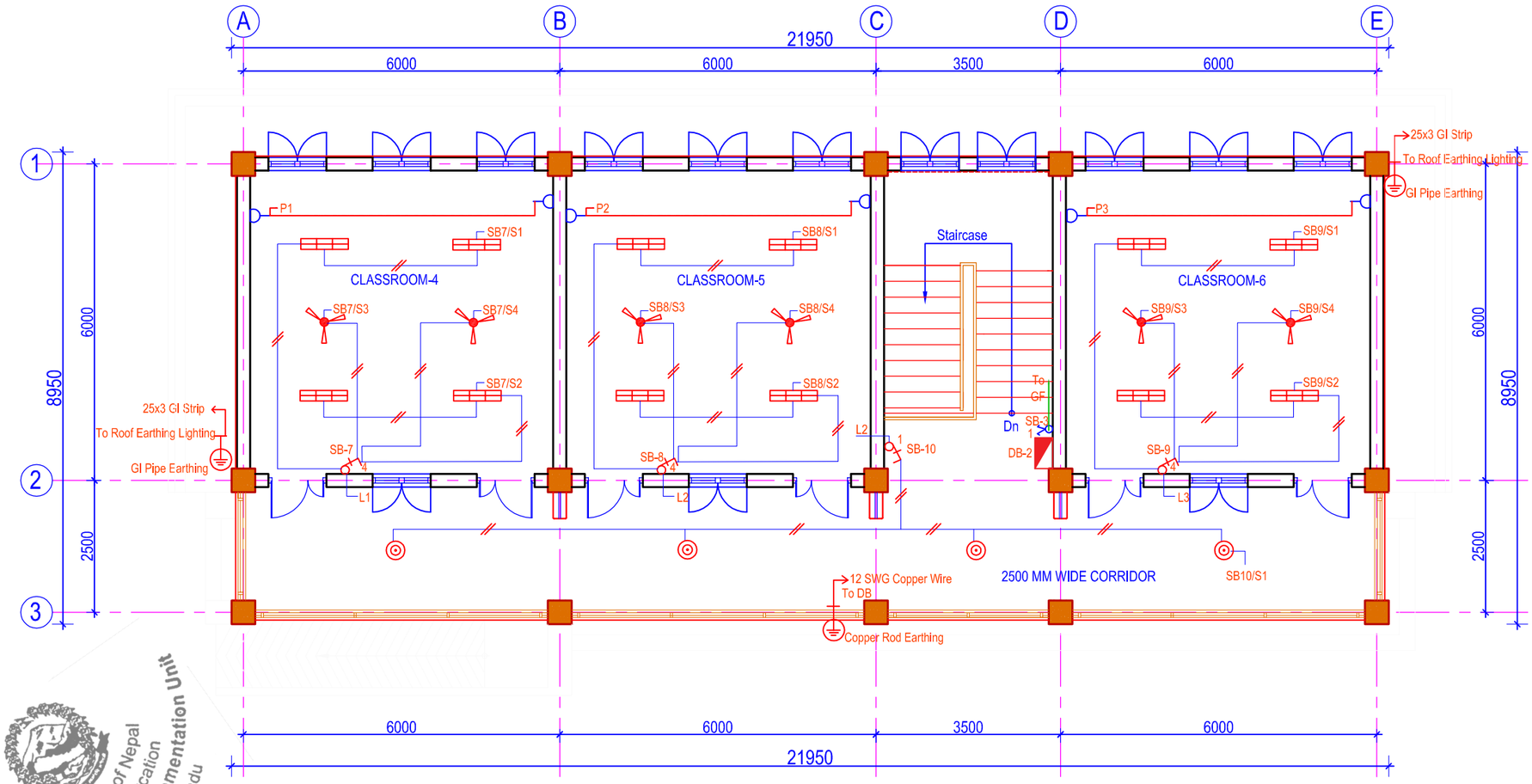

Government of Nepal
Ministry of Education
Central Level Project Implementation Unit
Gyaneshwor,Kathmandu

LIGHT,POWER & DB LAYOUT PLAN
(FIRST FLOOR)

(Scale= 1:100)

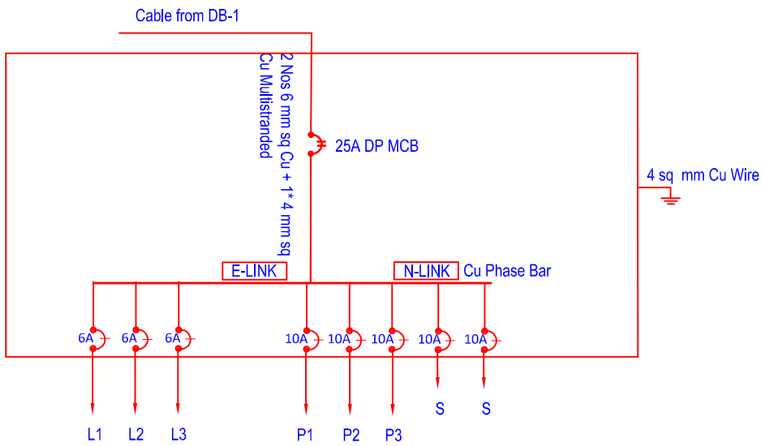

FIRST FLOOR L/P DISTRIBUTION SYSTEM (DB-2)

LEGEND

SN	SYMBOL	INDICATES	MOUNTING HEIGHT	REMARKS
1		2x28W Recess Type Mirror Optic	Attached to Ceiling	
2		1x28W Recess Type Mirror Optic	Attached to Ceiling	
3		2x28W Surface Type Mirror Optic	Attached to Ceiling	
4		1x28W Surface Type Mirror Optic	Attached to Ceiling	
5		13W CFL Dome Light	Attached to Ceiling	
6		13W CFL Recess Light	Attached to Ceiling	
7		13W LED Post Light	4 Meter Steel Pole	
8		8W CFL Wall Light		
9		1200mm Ceiling Fan	Attached to Ceiling	

SN	SYMBOL	INDICATES	MOUNTING HEIGHT	REMARKS
10		6A Power Socket	Above Skirting	
11		Two way Switch	1.25m above Finished Floor Level	
12	1,2,3,...	One way Switch	1.25m above Finished Floor Level	
13		Single Pole MCB	-	
14		Double Pole MCB	-	
15		Three Pole MCB	-	
16		NEA Meter	2.5 m above Ground Level	
17		Distribution Board	2.5 m above Ground Level	
18		Main Panel Board	2.5 m above Ground Level	

1:100 0 1M 2M 3M 4M 5M

NOTES:

1. Any discrepancy in the drawing to be immediately reported to the consultant or concerned engineer.
2. Drawing are not to be directly measured.
3. Read this drawing along with other related drawings and coordinate with Structural, Electrical, Plumbing and other services drawings.
4. Refer doors & windows schedule/elevations for size of doors & windows
5. Provide threshold at all exterior doors as per details, unless otherwise indicated.
6. The location of ramps to be adjusted as per site condition.

Government Of Nepal
Department Of Education
Sanothimi, Bhaktapur, Nepal

Donor : Japan International Cooperation Agency

Project Title:
Emergency School Reconstruction Project

ORIENTAL CONSULTANTS GLOBAL
Global Consulting for sustainable Development
Joint Venture with
MOHRI, ARCHITECT & ASSOCIATES, INC

Sub-Consultant:
East West Engineering Service Pvt. Ltd.
P. Box-8621,Bansbari, Kathmandu, Nepal. web: ewesnepal.com
Tel: 9771-4373316, Fax:4650203, email- hbgewe@gmail.com

Mr. Tomoki Miyano	Mr. H.B. Gurung
Mr. Hisafumi Michikawa	Mr. A.S. Tamang
Mr. Wong Kuok Hung	Mr. A.K. Dhungana

Type Design :
2 STOREY 6 SMALL CLASSROOMS

Sheet Title :
LIGHT, POWER & DB LAYOUT PLAN (FIRST FLOOR)

Sheet No. 2-6C (S)

Date : September, 2016

Print Sheet : A'3' Size

E-02